Università degli studi di Udine

Linear Models for Composite Thin-Walled Beams by $Gamma$-Convergence. Part I: Open Cross Sections

Original

Availability:
This version is available http://hdl.handle.net/11390/1001346 since

Publisher:

Published
DOI:10.1137/140951473

Terms of use:
The institutional repository of the University of Udine (http://air.uniud.it) is provided by ARIC services. The aim is to enable open access to all the world.

Publisher copyright

(Article begins on next page)

12 October 2024

SIAM J. MATH. ANAL.
Vol. 46, No. 5, pp. 3296–3331
© 2014 Society for Industrial and Applied Mathematics

LINEAR MODELS FOR COMPOSITE THIN-WALLED BEAMS BY Γ-CONVERGENCE. PART I: OPEN CROSS SECTIONS*

C. DAVINI†, L. FREDDI‡, AND R. PARONI§

Abstract. We consider a beam whose cross section is a tubular neighborhood, with thickness scaling with a parameter δ_ε, of a simple curve γ whose length scales with ε. To model a thin-walled beam we assume that δ_ε goes to zero faster than ε, and we measure the rate of convergence by a slenderness parameter $\mathfrak{s}$ which is the ratio between ε^2 and δ_ε. In this Part I of the work we focus on the case where the curve is open. Under the assumption that the beam has a linearly elastic behavior, for $\mathfrak{s} \in \{0, 1\}$ we derive two one-dimensional Γ-limit problems by letting ε go to zero. The limit models are obtained for a fully anisotropic and inhomogeneous material, thus making the theory applicable for composite thin-walled beams. The approach recovers in a systematic way, and gives account of, many features of the beam models in the theory of Vlasov.

Key words. thin-walled beams, Γ-convergence, open cross section, linear elasticity, dimension reduction

AMS subject classifications. 74K10, 74B05, 49J45, 53J20

DOI. 10.1137/140951473

1. Introduction.

Composite, i.e., anisotropic and inhomogeneous, thin-walled beams have been extensively studied by the engineering community. We refrain from citing the abundant literature on the subject; we quote, instead, the opening lines of the abstract of [12]: "There is no lack of composite beam theories. Quite to the contrary, there might be too many of them. Different approaches, notation, etc., are used by authors of those theories, so it is not always straightforward to compare the assumptions made and to assess the quantitative consequences of those assumptions." This excerpt well describes the status of the research on composite thin-walled beams. To shed some light on the huge variety of models present in the literature, it is necessary to take a rigorous approach, possibly free of assumptions. The aim of this paper is to derive mechanical models for composite thin-walled beams by Γ-convergence (see [2]), starting from the three-dimensional theory of linear elasticity.

This line of research essentially started in [6], where a mechanical model was obtained for an isotropic homogeneous and linearly elastic thin-walled beam with rectangular cross section. In that paper the long side of the rectangle scaled with a small parameter $\varepsilon > 0$ and the other with ε^2. This "double" scaling was chosen to model a thin-walled beam. One of the main results was a compactness theorem in which different orders of convergence for the various components of the displacement were established. Namely, a sequence of displacements with equi-bounded energy is such that

*Received by the editors January 3, 2014; accepted for publication (in revised form) July 9, 2014; published electronically October 2, 2014.
http://www.siam.org/journals/sima/46-5/95147.html
†Dipartimento di Ingegneria Civile e Architettura, Universitá degli Studi di Udine, 33100 Udine, Italy (davini@uniud.it).
‡Dipartimento di Matematica e Informatica, Universitá degli Studi di Udine, 33100 Udine, Italy (lorenzo.freddi@uniud.it).
§DADU, Università degli Studi di Sassari, Palazzo del Pou Salit, 07041 Alghero, Italy (paroni@uniss.it). This author received support from the Regione Autonoma della Sardegna under the project "Modellazione Multiscala della Meccanica dei Materiali Compositi (M4C)."

(i) the component parallel to the short side of the rectangle is bounded in H^1;
(ii) the component parallel to the long side of the rectangle divided by ε is bounded in H^1;
(iii) the component parallel to the axis of the beam divided by ε^2 is bounded in H^1.

Thin-walled beams with a multirectangular cross section were studied in [7]. Each rectangle composing the cross section had sides that scaled with ε and ε^2, respectively. The analysis was carried out by "splitting" the beam in different rectangular thin-walled beams, in order to use the compactness theorem of [6], and then "recomposing" the beam by means of appropriate junction conditions. This procedure circumvented the necessity to prove a compactness theorem specific for the type of beams considered.

The assumptions of homogeneity and isotropy were completely removed in [8], where, still for a rectangular thin-walled beam, very detailed convergence results for the displacements were obtained.

In [4, 5] a hierarchy of models for homogeneous anisotropic thin-walled beams with rectangular cross sections have been deduced starting from the three-dimensional theory of nonlinear elasticity. In the nonlinear setting the scaling of the energy determines the limit model: for "very small" energy a linear model is obtained, while for "large" energies different nonlinear limit models are deduced. Some of the compactness results used in the present paper were inspired by the nonlinear counterpart studied in [4, 5].

In this paper we consider a fully anisotropic and inhomogeneous thin-walled beam with arbitrary geometry of the cross section clamped at one of its bases. More precisely, the cross section we take into consideration is a tubular neighborhood, whose thickness scales with a parameter $\delta_\varepsilon > 0$, of a simple planar curve γ whose length scales with ε. The curve γ can be either open or closed but not completely straight. As in [4, 5], the thinness of the "wall" is characterized by the assumption that

$$\lim_{\varepsilon\to 0} \frac{\delta_\varepsilon}{\varepsilon} = 0.$$

By allowing the thickness of the wall to scale with δ_ε, instead of simply ε^2, we can study beams with cross section having different degrees of *slenderness*. We measure this quantity by means of a parameter $\mathfrak{s}$ defined by

$$\mathfrak{s} := \lim_{\varepsilon\to 0} \frac{\varepsilon^2}{\delta_\varepsilon}.$$

Without loss of generality, it suffices to consider three cases $\mathfrak{s} \in \{0, 1, +\infty\}$. In this paper we consider only $\mathfrak{s} \in \{0, 1\}$. As in the case of rectangular cross sections, our analysis is based on a compactness theorem. Roughly, it establishes that a sequence of displacements with equi-bounded energy is such that

(i) the projection on the plane of the cross section divided by $\delta_\varepsilon/\varepsilon$ is bounded in H^1;
(ii) the component parallel to the axis of the beam divided by δ_ε is bounded in H^1.

In the case of rectangular thin-walled beams the compactness theorem follows directly from a "rescaled" Korn's inequality. For beams with a curved cross section, treated in this paper, it follows from a rescaled Korn's inequality and a detailed study of the sequence of the strain components in the direction of the axis of the beam and in the direction tangent to the midline curve γ of the cross section (see Theorem 5.8). The

argument used in the proof works only if the curve γ is not completely straight; thus our result is complementary to that derived in [6] for rectangular thin-walled beams.

Recently Davoli [3] generalized the works [4, 5] by studying thin-walled beams with both open and curved cross section, starting from the three-dimensional theory of nonlinear elasticity. Her impressive work does not contain a compactness theorem as detailed as ours and thus the Γ-convergence analysis is carried out in terms of strains and not, as customary, in terms of displacements.

A very important kinematical parameter in any beam model is the twist of the cross section, hereafter denoted by ϑ. This parameter is "generated by" a sequence, whose terms involve derivatives of the displacement, bounded in L^2. (See (i) of Corollary 5.4 for a precise definition.) Thus, a priori ϑ is only an L^2-function. We show that for $\mathfrak{s} = 0$ the twist ϑ is an H^1-function and in the case $\mathfrak{s} = 1$ it is even an H^2-function. This augmented regularity of the twist is essentially a consequence of the "structure" of the limit displacements.

All the compactness results presented up to section 6 hold for beams with open and closed cross sections, but clearly, a closed cross section imposes more constraints on the limiting displacements than an open one. Although these constraints will be explored in the second part of this paper, it is worth mentioning a few results. For a closed cross section it will be proved that ϑ is identically equal to zero. This result essentially states that the sequence that generates the twist in the case of open cross sections is too "crude" and needs to be refined and further rescaled in the case of closed cross sections. As will be shown in Part II, such a refined sequence strongly depends on the geometry of the cross section. Moreover, still in the case of closed cross sections, further constraints on the limit strains will emerge and these will drastically affect the Γ-limit.

As already stated, in this paper we consider a fully anisotropic and inhomogeneous material. This generality makes part of the analysis quite involved, particuarly the proof of the so-called recovery sequence condition. Contrary to what is customary, we do not construct a recovery sequence but instead prove that there exists one. In order to do this, we set up a sequence of "auxiliary" minimization problems and show that the sequence of minimizers is indeed a recovery sequence. This procedure allows us to circumvent awkward constructions of the full recovery sequence and to limit ourselves to produce only few partial and simple "recoveries" that are needed in order to show that the sequence of minimizers is indeed a recovery sequence.

The paper is organized as follows. In section 2 we define the geometry of the cross section, with the relative scaling parameters, and we set up the problem. The curved cross section is, by a change of variables, "straightened" in section 3, while in section 4 it is "rescaled" to a fixed domain, i.e., independent of ε. In the same section we define a system of curvilinear components that will be used throughout the paper. Several compactness results are proved in section 5. In particular, in subsection 5.1 we obtain compactness results for appropriately rescaled components of the displacement, while in subsection 5.2 correspondent results for strains are proved. Section 6 anticipates the energy density of the limit problem and studies some of its properties, while section 7 is devoted to the characterization of the Γ-limit. The proof of the two compactness theorems is given in the appendix.

1.1. Notation. Throughout this article, and unless otherwise stated, we index vector and tensor components as follows. Greek indices α, β, and γ take values in the set $\{1, 2\}$ and Latin indices i, j, k, l in the set $\{1, 2, 3\}$. With (e_1, e_2, e_3) we shall denote the canonical basis of $\mathbb{R}^3$. $L^p(A; B)$ and $H^s(A; B)$ are the standard Lebesgue and

Sobolev spaces of functions defined on the domain A and taking values in B. When $B = \mathbb{R}$, or when the target set B is clear from the context, we will simply write $L^p(A)$ or $H^s(A)$; also, in the norms we shall systematically drop the target set. Convergence in the norm, that is, the so-called strong convergence, will be denoted by $\to$, while weak convergence is denoted with $\rightharpoonup$. With a little abuse of language, and because this is a common practice and does not give rise to any confusion, we use "sequences" even for those families indicized by a continuous parameter ε which, throughout the whole paper, will be assumed to belong to the interval $(0, 1]$. Throughout the paper, the constant C may change from expression to expression (and even in the same line). The scalar product between vectors or tensors is denoted by $\cdot$. $\mathbb{R}^{3\times 3}_{\mathrm{skw}}$ denotes the vector space of skew-symmetric 3×3 real matrices. For $A = (a_{ij}) \in \mathbb{R}^{3\times 3}$ we denote the Euclidean norm (with the summation convention) by $|A| = \sqrt{A \cdot A} = \sqrt{tr(AA^T)} = \sqrt{a_{ij}a_{ij}}$. Whenever we write a matrix by means of its columns we separate the columns with vertical bars $(\cdot|\cdot|\cdot) \in \mathbb{R}^{3\times 3}$. ∂_i stands for the distributional derivative $\frac{\partial}{\partial x_i}$. For every a, $b \in \mathbb{R}^3$ we denote by $a \odot b := \frac{1}{2}(a \otimes b + b \otimes a)$ the symmetrized diadic product, where $(a \otimes b)_{ij} = a_i b_j$.

From section 5 on, when a function of three variables is independent of one or two of them we consider it as a function of the remaining variables only. This means, for instance, that a function $u \in H^1((0, \ell) \times (0, L); \mathbb{R}^m)$ will be identified with a corresponding $u \in H^1((0, \ell) \times (-h/2, h/2) \times (0, L); \mathbb{R}^m)$ such that $\partial_2 u = 0$ and a function $v \in H^1((0, L); \mathbb{R}^m)$ will be identified with a corresponding $v \in H^1((0, \ell) \times (-h/2, h/2) \times (0, L); \mathbb{R}^m)$ such that $\partial_1 v = \partial_2 v = 0$. The notation da stands for the area element $dx_1 dx_2$. As usual, $\fint$ denotes the integral mean value.

2. Setting of the problem. We consider a sequence of thin-walled beams whose cross section is a tubular neighborhood, with thickness scaling with a parameter δ_ε, of a simple curve γ whose length scales with ε, as detailed below.

Let (e_1, e_2, e_3) be an orthonormal basis of $\mathbb{R}^3$ and ε, δ_ε two positive parameters converging to zero. We consider a simple curve $\gamma \in W^{3,\infty}(I; \mathbb{R}^2 \times \{0\})$, where I is an interval of length $\ell > 0$, for two distinct instances:

- $I = (0, \ell)$ with $\lim_{s\to\ell} \gamma'(s) = \lim_{s\to 0} \gamma'(s)$ if $\lim_{s\to\ell} \gamma(s) = \lim_{s\to 0} \gamma(s)$;
- $I = [0, \ell]$ with $\gamma(\ell) = \gamma(0)$ and $\gamma'(\ell) = \gamma'(0)$.

In the former case we will say that the curve is open, in the latter that it is closed. We assume γ to be parameterized by the arclength parameter $s \in [0, \mathrm{length}(\gamma)]$, so that $t := \gamma'$ is a unit tangent vector contained in the plane spanned by e_1 and e_2. We denote by $n := e_3 \wedge t$ the unit normal to γ and by $\kappa := t' \cdot n$ its curvature, so that $t' = \kappa n$ and $n' = -\kappa t$. We assume that κ is not identically equal to zero.

Let $\varepsilon \in (0, 1)$, $\tilde{I}_\varepsilon := \varepsilon I$, and $\tilde{\gamma}^\varepsilon : \tilde{I}_\varepsilon \to \mathbb{R}^2 \times \{0\}$ be the map defined by $\tilde{\gamma}^\varepsilon(s) := \varepsilon\gamma(s/\varepsilon)$. We set $\tilde{t}^\varepsilon = \tilde{\gamma}^{\varepsilon\prime}$, $\tilde{n}^\varepsilon = e_3 \wedge \tilde{t}^\varepsilon$, and $\tilde{\kappa}^\varepsilon = \tilde{t}^{\varepsilon\prime} \cdot \tilde{n}^\varepsilon$ so that $\tilde{t}^\varepsilon(s) = t(s/\varepsilon)$, $\tilde{n}^\varepsilon(s) = n(s/\varepsilon)$, and $\tilde{\kappa}^\varepsilon(s) = \kappa(s/\varepsilon)/\varepsilon$.

Let $h > 0$. We consider a beam with cross section of diameter that scales with ε and constant thickness $\delta_\varepsilon h$. To deal with thin-walled beams, we assume that

$$\lim_{\varepsilon\to 0} \frac{\delta_\varepsilon}{\varepsilon} = 0. \tag{2.1}$$

To define the region occupied by the beam in the reference configuration we set

$$\tilde{\omega}_\varepsilon := \left\{ (\tilde{x}_1, \tilde{x}_2) \in \mathbb{R}^2 : \tilde{x}_1 \in \tilde{I}_\varepsilon \text{ and } \tilde{x}_2 \in \left(-\frac{\delta_\varepsilon h}{2}, \frac{\delta_\varepsilon h}{2} \right) \right\}, \qquad \widetilde{\Omega}_\varepsilon := \tilde{\omega}_\varepsilon \times (0, L),$$

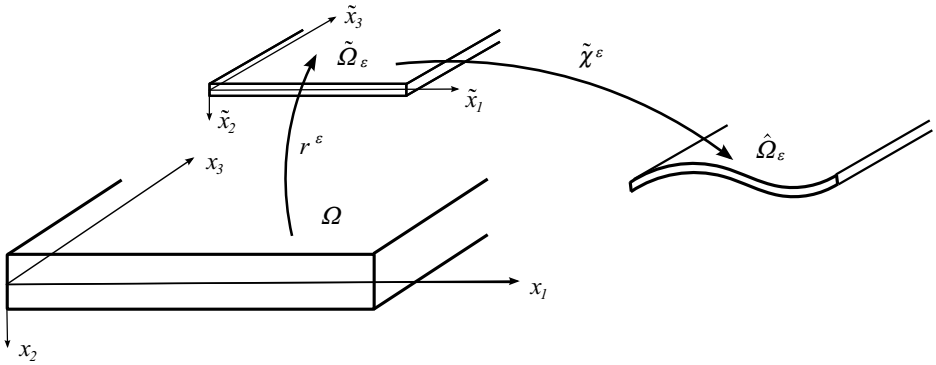

FIG. 1. *The domains* $\widehat{\Omega}_\varepsilon$, $\widetilde{\Omega}_\varepsilon$, *and* Ω.

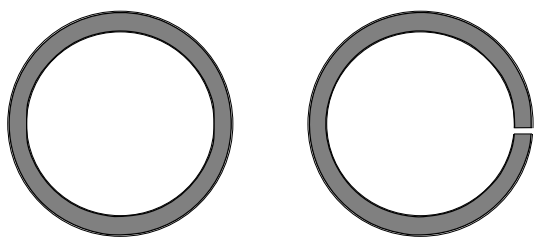

FIG. 2. *Two cross sections with* $\lim_{s\to 0}\gamma(s) = \lim_{s\to \ell}\gamma(s)$ *but one closed and the other open.*

where $L > 0$ denotes the length of the beam, and we consider the map $\tilde{\chi}^\varepsilon : \widetilde{\Omega}_\varepsilon \to \mathbb{R}^3$ defined by

$$\tilde{\chi}^\varepsilon(\tilde{x}) := \tilde{\gamma}^\varepsilon(\tilde{x}_1) + \tilde{x}_2\tilde{n}^\varepsilon(\tilde{x}_1) + \tilde{x}_3 e_3. \tag{2.2}$$

The region occupied by the beam in the reference configuration is

$$\widehat{\Omega}_\varepsilon := \tilde{\chi}^\varepsilon(\widetilde{\Omega}_\varepsilon), \tag{2.3}$$

see Figure 1. We note that $\widehat{\Omega}_\varepsilon$ is an open set independently of the fact that the curve γ is open or closed. If the curve γ is open (closed) we say that the thin-walled beam has an open (closed) cross section (see Figure 2).

Henceforth we denote by

$$E\hat{u}(\hat{x}) := \mathrm{sym}(\nabla\hat{u}(\hat{x})) := \frac{\nabla\hat{u}(\hat{x}) + \nabla\hat{u}(\hat{x})^T}{2} \tag{2.4}$$

the strain corresponding to the displacement $\hat{u} : \widehat{\Omega}_\varepsilon \to \mathbb{R}^3$.

In what follows we consider an inhomogeneous linear hyperelastic material with elasticity tensor $\mathbb{C}^\varepsilon$, whose components $\mathbb{C}^\varepsilon_{ijkl} \in L^\infty(\widehat{\Omega}_\varepsilon)$ satisfy the major and minor symmetries, i.e., $\mathbb{C}^\varepsilon_{ijkl} = \mathbb{C}^\varepsilon_{ijlk} = \mathbb{C}^\varepsilon_{klij}$. We further suppose $\mathbb{C}^\varepsilon$ to be uniformly positive definite, that is, there exists $c > 0$ such that

$$\mathbb{C}^\varepsilon(\hat{x})M \cdot M \geq c|M|^2 \tag{2.5}$$

for almost every $\hat{x}$ and for all symmetric matrices M.

We assume the beam to be clamped at $x_3 = 0$, and we denote by

$$H^1_{dn}(\widehat{\Omega}_\varepsilon;\mathbb{R}^3) := \big\{\hat{u} \in H^1(\widehat{\Omega}_\varepsilon;\mathbb{R}^3) : \hat{u} = 0 \text{ on } \partial\hat{\Omega}_\varepsilon \cap \{x_3 = 0\}\big\}.$$

The energy functional of the beam $\hat{\mathscr{F}}_\varepsilon : H^1_{dn}(\widehat{\Omega}_\varepsilon;\mathbb{R}^3) \to \mathbb{R}$ is given by

$$\hat{\mathscr{F}}_\varepsilon(\hat{u}) := \frac{1}{2}\int_{\widehat{\Omega}_\varepsilon} \mathbb{C}^\varepsilon E\hat{u} \cdot E\hat{u}\, d\hat{x} - \hat{\mathscr{L}}_\varepsilon(\hat{u}), \tag{2.6}$$

where $\hat{\mathscr{L}}_\varepsilon(\hat{u})$ denotes the work done by the loads on the displacements $\hat{u}$. Our analysis will focus on the asymptotic behavior of the elastic energy; the work done by the loads will be considered only in Remark 7.3.

3. Representation of the deformation gradient and the strains as fields on $\widetilde{\Omega}_\varepsilon$. We shall use the curvilinear coordinates $\{\tilde{x}_1, \tilde{x}_2, \tilde{x}_3\}$ and the natural basis $(\tilde{g}^\varepsilon_1, \tilde{g}^\varepsilon_2, \tilde{g}^\varepsilon_3)$, where the basis vectors are defined by

$$\tilde{g}^\varepsilon_i := \frac{\partial \tilde{\chi}^\varepsilon}{\partial \tilde{x}_i}.$$

A simple computation yields

$$\tilde{g}^\varepsilon_1 = (1 - \tilde{x}_2\tilde{\kappa}^\varepsilon)\tilde{t}^\varepsilon, \quad \tilde{g}^\varepsilon_2 = \tilde{n}^\varepsilon, \quad \tilde{g}^\varepsilon_3 = e_3.$$

The dual basis $(\tilde{g}^1_\varepsilon, \tilde{g}^2_\varepsilon, \tilde{g}^3_\varepsilon)$, defined by the set of equations $\tilde{g}^i_\varepsilon \cdot \tilde{g}^\varepsilon_j = \delta^i_j$ with δ^i_j the Kronecker's symbols, turns out to be

$$\tilde{g}^1_\varepsilon = \frac{\tilde{t}^\varepsilon}{1 - \tilde{x}_2\tilde{\kappa}^\varepsilon}, \quad \tilde{g}^2_\varepsilon = \tilde{n}^\varepsilon, \quad \tilde{g}^3_\varepsilon = e_3.$$

Since

$$\det \nabla\tilde{\chi}^\varepsilon(\tilde{x}) = 1 - \tilde{x}_2\tilde{\kappa}^\varepsilon(\tilde{x}_1) > 1 - \frac{\delta_\varepsilon}{\varepsilon}\frac{h|\kappa(\tilde{x}_1/\varepsilon)|}{2} > 0$$

for any ε small enough, due to assumption (2.1), then $\tilde{\chi}^\varepsilon$ is locally invertible and, in fact, it is a diffeomorphism, up to a set of measure zero in the case of closed cross sections, between $\widetilde{\Omega}_\varepsilon$ and $\widehat{\Omega}_\varepsilon$.

For every $\hat{u} : \widehat{\Omega}_\varepsilon \to \mathbb{R}^3$, let $\tilde{u} : \widetilde{\Omega}_\varepsilon \to \mathbb{R}^3$ be defined by

$$\tilde{u} := \hat{u} \circ \tilde{\chi}^\varepsilon$$

so that $\hat{u}(\hat{x}) = \tilde{u}(\tilde{x})$, where $\hat{x} = \tilde{\chi}^\varepsilon(\tilde{x})$. By the chain rule we find

$$\widetilde{H}^\varepsilon\tilde{u} := \nabla\tilde{u}(\nabla\tilde{\chi}^\varepsilon)^{-1} = (\nabla\hat{u}) \circ \tilde{\chi}^\varepsilon. \tag{3.1}$$

We set

$$\widetilde{E}^\varepsilon\tilde{u} := \mathrm{sym}\widetilde{H}^\varepsilon\tilde{u} = (E\hat{u}) \circ \tilde{\chi}^\varepsilon. \tag{3.2}$$

We refrain from writing the energy on $\widetilde{\Omega}_\varepsilon$ since it will have no use in our analysis.

4. Problem on a fixed domain. In order to rewrite the problem on a domain which does not depend on ε, let us introduce the notation $\omega := \tilde{\omega}_1$ and $\Omega := \widetilde{\Omega}_1$ and consider the rescaling map $r^\varepsilon : \Omega \to \widetilde{\Omega}_\varepsilon$ defined by

$$r^\varepsilon(x) := (\varepsilon x_1, \delta_\varepsilon x_2, x_3).$$

Let $g_i^\varepsilon := \tilde{g}_i^\varepsilon \circ r^\varepsilon$, $g_\varepsilon^i := \tilde{g}_\varepsilon^i \circ r^\varepsilon$, i.e.,

$$g_1^\varepsilon = \left(1 - \frac{\delta_\varepsilon}{\varepsilon} x_2 \kappa\right) t, \quad g_\varepsilon^1 = \left(1 - \frac{\delta_\varepsilon}{\varepsilon} x_2 \kappa\right)^{-1} t, \quad g_2^\varepsilon = g_\varepsilon^2 = n, \quad g_3^\varepsilon = g_\varepsilon^3 = e_3.$$

Accordingly, we associate to $\tilde{u} : \widetilde{\Omega}_\varepsilon \to \mathbb{R}^3$ the function $u : \Omega_\varepsilon \to \mathbb{R}^3$ defined by

$$u := \tilde{u} \circ r^\varepsilon$$

so that $u(x) = \tilde{u}(\tilde{x})$, where $\tilde{x} = r^\varepsilon(x)$. By the chain rule we have

$$\left(\frac{1}{\varepsilon}\partial_1 u \,\middle|\, \frac{1}{\delta_\varepsilon}\partial_2 u \,\middle|\, \partial_3 u\right) = (\nabla \tilde{u}) \circ r^\varepsilon.$$

Observing that

$$\nabla \tilde{\chi}^\varepsilon = \left(\tilde{g}_1^\varepsilon | \tilde{g}_2^\varepsilon | \tilde{g}_3^\varepsilon\right), \qquad \left(\nabla \tilde{\chi}^\varepsilon\right)^{-1} = \left(\tilde{g}_\varepsilon^1 | \tilde{g}_\varepsilon^2 | \tilde{g}_\varepsilon^3\right)^T, \tag{4.1}$$

then we have

$$H^\varepsilon u := \left(\frac{1}{\varepsilon}\partial_1 u \,\middle|\, \frac{1}{\delta_\varepsilon}\partial_2 u \,\middle|\, \partial_3 u\right) \left(g_\varepsilon^1 | g_\varepsilon^2 | g_\varepsilon^3\right)^T = \left(\widetilde{H}^\varepsilon \tilde{u}\right) \circ r^\varepsilon \tag{4.2}$$

and

$$E^\varepsilon u := \operatorname{sym} H^\varepsilon u = (\widetilde{E}^\varepsilon \tilde{u}) \circ r^\varepsilon. \tag{4.3}$$

We note that (4.2) implies

$$\left(\frac{1}{\varepsilon}\partial_1 u \,\middle|\, \frac{1}{\delta_\varepsilon}\partial_2 u \,\middle|\, \partial_3 u\right) = H^\varepsilon u \left(g_1^\varepsilon | g_2^\varepsilon | g_3^\varepsilon\right), \tag{4.4}$$

that is,

$$\frac{1}{\varepsilon}\partial_1 u = H^\varepsilon u \, g_1^\varepsilon, \qquad \frac{1}{\delta_\varepsilon}\partial_2 u = H^\varepsilon u \, g_2^\varepsilon, \qquad \partial_3 u = H^\varepsilon u \, g_3^\varepsilon. \tag{4.5}$$

Let $\chi^\varepsilon := \tilde{\chi}^\varepsilon \circ r^\varepsilon$. By means of (3.2) we may rewrite (4.3) as

$$E^\varepsilon u = (\widetilde{E}^\varepsilon \tilde{u}) \circ r^\varepsilon = (E\hat{u}) \circ \chi^\varepsilon.$$

Then, by setting $\mathscr{L}_\varepsilon(u) := \hat{\mathscr{L}}_\varepsilon(u \circ \chi^{\varepsilon -1})/(\varepsilon\delta_\varepsilon)$ and $\sqrt{g^\varepsilon} := 1 - (\delta_\varepsilon/\varepsilon) x_2 \kappa$, we get

$$\frac{\hat{\mathscr{F}}_\varepsilon(\hat{u})}{\varepsilon\delta_\varepsilon} = \frac{1}{2}\int_\Omega \mathbb{C} E^\varepsilon u \cdot E^\varepsilon u \sqrt{g^\varepsilon}\, dx - \mathscr{L}_\varepsilon(u) =: \mathscr{F}_\varepsilon(u), \tag{4.6}$$

where we have assumed that $\mathbb{C} := \mathbb{C}^\varepsilon \circ \chi^\varepsilon$ is, in fact, independent of ε. The functional $\mathscr{L}_\varepsilon$ will be discussed in Remark 7.3. The domain of the energy functional $\mathscr{F}_\varepsilon$ becomes

$$H^1_{dn}(\Omega; \mathbb{R}^3) := \left\{u \in H^1(\Omega; \mathbb{R}^3) : u = 0 \text{ on } \tilde{\omega} \times \{0\}\right\}$$

for an open cross section and

$$H^1_{\#dn}(\Omega;\mathbb{R}^3) := \left\{u \in H^1_{dn}(\Omega;\mathbb{R}^3) : u(0,\cdot,\cdot) = u(\ell,\cdot,\cdot)\right\}$$

for a closed cross section.

From the assumptions made on the elasticity tensor $\mathbb{C}^\varepsilon$ (see (2.5)) it follows that $\mathbb{C}_{ijkl} \in L^\infty(\Omega)$, that $\mathbb{C}_{ijkl} = \mathbb{C}_{ijlk} = \mathbb{C}_{klij}$, and that there exists $c > 0$ such that

$$\mathbb{C}(x)M \cdot M \geq c|M|^2 \tag{4.7}$$

for almost every x and for all symmetric matrices M.

For later use we write

$$(H^\varepsilon u)_{ij} := g^\varepsilon_i \cdot H^\varepsilon u\, g^\varepsilon_j,$$

which give the components of $H^\varepsilon u$ in the local basis $\{g^\varepsilon_1, g^\varepsilon_2, g^\varepsilon_3\}$. From (4.5), they are

$$\begin{aligned}
&(H^\varepsilon u)_{11} = \frac{1}{\varepsilon} g^\varepsilon_1 \cdot \partial_1 u, && (H^\varepsilon u)_{12} = \frac{1}{\delta_\varepsilon} g^\varepsilon_1 \cdot \partial_2 u, && (H^\varepsilon u)_{13} = g^\varepsilon_1 \cdot \partial_3 u,\\
&(H^\varepsilon u)_{21} = \frac{1}{\varepsilon} g^\varepsilon_2 \cdot \partial_1 u, && (H^\varepsilon u)_{22} = \frac{1}{\delta_\varepsilon} g^\varepsilon_2 \cdot \partial_2 u, && (H^\varepsilon u)_{23} = g^\varepsilon_2 \cdot \partial_3 u,\\
&(H^\varepsilon u)_{31} = \frac{1}{\varepsilon} g^\varepsilon_3 \cdot \partial_1 u, && (H^\varepsilon u)_{32} = \frac{1}{\delta_\varepsilon} g^\varepsilon_3 \cdot \partial_2 u, && (H^\varepsilon u)_{33} = g^\varepsilon_3 \cdot \partial_3 u.
\end{aligned} \tag{4.8}$$

We also note that

$$(E^\varepsilon u)_{ij} := g^\varepsilon_i \cdot E^\varepsilon u\, g^\varepsilon_j = \frac{(H^\varepsilon u)_{ij} + (H^\varepsilon u)_{ji}}{2}. \tag{4.9}$$

5. Kinematic results. Throughout the section we consider a sequence of functions $u^\varepsilon \in H^1_{dn}(\Omega;\mathbb{R}^3)$ such that

$$\sup_\varepsilon \frac{1}{\delta_\varepsilon} \|E^\varepsilon u^\varepsilon\|_{L^2(\Omega)} < +\infty. \tag{5.1}$$

THEOREM 5.1. *There exists a sequence $\{W^\varepsilon\} \subseteq H^1((0,\ell)\times(0,L);\mathbb{R}^{3\times3}_{\mathrm{skw}})$ such that*

(i) $\|H^\varepsilon u^\varepsilon - W^\varepsilon\|_{L^2(\Omega)} \leq C\delta_\varepsilon$,
(ii) $\|W^\varepsilon\|_{L^2(\Omega)} + \|\partial_3 W^\varepsilon\|_{L^2(\Omega)} \leq C$,
(iii) $\|\partial_1 W^\varepsilon\|_{L^2(\Omega)} \leq C\varepsilon$

for a suitable $C > 0$ and every ε small enough. Moreover, there exists $W \in H^1_{dn}((0,L);\mathbb{R}^{3\times3}_{\mathrm{skw}})$ such that, up to a subsequence,

$$W^\varepsilon \rightharpoonup W \tag{5.2}$$

in $H^1((0,\ell)\times(0,L);\mathbb{R}^{3\times3}_{\mathrm{skw}})$.

Proof. The proof is given in the appendix (section 8). ∎

THEOREM 5.2. *If $\{u^\varepsilon\} \subseteq H^1_{\#dn}(\Omega;\mathbb{R}^3)$ is a sequence for which (5.1) holds, then the conclusions of Theorem 5.1 hold for a sequence $\{W^\varepsilon\}$ such that $W^\varepsilon(0,\cdot) = W^\varepsilon(\ell,\cdot)$ for every ε.*

Proof. The proof is given given in the appendix (section 8). ∎

For the rest of this section W^ε and W will be as in Theorem 5.1.

COROLLARY 5.3. *The following propositions hold up to subsequences:*
(i) $H^\varepsilon u^\varepsilon \to W$ *in* $L^2(\Omega;\mathbb{R}^{3\times 3})$,
(ii) *there exists* $u \in H^1_{dn}(\Omega;\mathbb{R}^3)$ *such that* $u^\varepsilon \rightharpoonup u$ *in* $H^1_{dn}(\Omega;\mathbb{R}^3)$.

Proof. Item (i) follows from (5.2), Rellich's compactness theorem, and part (i) of Theorem 5.1. From (4.5) and the definition of g_i^ε it follows that

$$\begin{aligned}\|\nabla u^\varepsilon\|_{L^2(\Omega)} &\le \left\|\left(\frac{1}{\varepsilon}\partial_1 u^\varepsilon \,\middle|\, \frac{1}{\delta_\varepsilon}\partial_2 u^\varepsilon \,\middle|\, \partial_3 u^\varepsilon\right)\right\|_{L^2(\Omega)} = \left\|H^\varepsilon u^\varepsilon \left(g_1^\varepsilon|g_2^\varepsilon|g_3^\varepsilon\right)\right\|_{L^2(\Omega)}\\ &\le C\|H^\varepsilon u^\varepsilon\|_{L^2(\Omega)},\end{aligned}$$

and hence (ii) follows from (i). ∎

Hereafter we set $\vartheta := n\cdot Wt$. By the regularity of γ we have $\vartheta \in H^1_{dn}(0,L)$.

COROLLARY 5.4. *There exists* $B \in L^2((0,\ell)\times(0,L);\mathbb{R}^{3\times 3}_{\mathrm{skw}})$ *such that, up to subsequences,*

$$\frac{\partial_1 W^\varepsilon}{\varepsilon} \rightharpoonup B \tag{5.3}$$

in $L^2((0,\ell)\times(0,L);\mathbb{R}^{3\times 3}_{\mathrm{skw}})$. *Then*
(i) $W^\varepsilon_{21} := g_2^\varepsilon \cdot W^\varepsilon g_1^\varepsilon \rightharpoonup \vartheta$ *in* $H^1_{dn}((0,\ell)\times(0,L))$,
(ii) $W = \vartheta(n\otimes t - t\otimes n)$,
(iii) $Be_3 = \partial_3\vartheta\, n$,
(iv) $u = 0$.

Proof. The existence of B is a consequence of (iii) of Theorem 5.1.

Item (i) follows from (5.2) and the uniform convergence of g_1^ε and g_2^ε to t and n, respectively.

Let $W_{13} := t\cdot We_3$ and $W_{23} := n\cdot We_3$. From (4.8) and (i)–(ii) of Corollary 5.3 we deduce that

$$W_{13} = t\cdot\partial_3 u = \partial_3(u\cdot t), \qquad W_{23} = n\cdot\partial_3 u = \partial_3(u\cdot n). \tag{5.4}$$

We now claim that

$$Be_3 = \partial_3 Wt. \tag{5.5}$$

Indeed, let $\psi \in C_0^\infty((0,\ell)\times(0,L))$. By (i) of Theorem 5.1, by (i) of Corollary 5.3, and taking into account (4.4) we have that

$$\begin{aligned}0 &= \lim_{\varepsilon\to 0}\int_\Omega \left(\frac{H^\varepsilon u^\varepsilon e_3}{\varepsilon} - \frac{W^\varepsilon e_3}{\varepsilon}\right)\partial_1\psi\,dx = \lim_{\varepsilon\to 0}\int_\Omega\left(\frac{\partial_3 u^\varepsilon}{\varepsilon} - \frac{W^\varepsilon e_3}{\varepsilon}\right)\partial_1\psi\,dx\\ &= \lim_{\varepsilon\to 0}\int_\Omega \frac{\partial_1 u^\varepsilon}{\varepsilon}\partial_3\psi + \frac{\partial_1 W^\varepsilon e_3}{\varepsilon}\psi\,dx = \lim_{\varepsilon\to 0}\int_\Omega H^\varepsilon u^\varepsilon g_1^\varepsilon\partial_3\psi + \frac{\partial_1 W^\varepsilon e_3}{\varepsilon}\psi\,dx\\ &= \int_\Omega Wt\partial_3\psi + Be_3\psi\,dx = \int_\Omega(-\partial_3 Wt + Be_3)\psi\,dx,\end{aligned}$$

from which we get (5.5). Since B is a skew-symmetric matrix field we have that $e_3\cdot Be_3 = 0$, and hence by (5.5) it follows that

$$0 = -e_3\cdot\partial_3 Wt = t\cdot\partial_3 We_3.$$

Since t is not constant and also $e_3\cdot\partial_3 We_3 = 0$, it follows that

$$\partial_3 We_3 = 0.$$

Thus $We_3 = 0$, because $We_3 = 0$ at $\{x_3 = 0\}$ as $W \in H^1_{dn}((0,\ell) \times (0,L); \mathbb{R}^{3\times 3}_{\mathrm{skw}})$. Hence, $W_{13} = W_{23} = 0$ and this implies (ii).

From (5.5) it follows that $t \cdot Be_3 = 0$, since W is a skew-symmetric matrix field, and still from (5.5) we have that $n \cdot Be_3 = \partial_3(n \cdot Wt) = \partial_3\vartheta$. Hence also (iii) has been proved.

We finally prove (iv). Since $W_{13} = W_{23} = 0$ and $u \in H^1_{dn}(\Omega; \mathbb{R}^3)$, from (5.4) we deduce that $u \cdot t = u \cdot n = 0$. Therefore, to conclude the proof it suffices to show that $u_3 = 0$. Indeed, from (4.8) and (i) of Theorem 5.1, and since $W^\varepsilon_{33} = 0$, it follows that $\partial_3 u^\varepsilon_3 \to 0$ in $L^2(\Omega)$. Hence, by (ii) of Corollary 5.3, we have $\partial_3 u_3 = 0$, which implies that $u_3 = 0$, since $u_3 = 0$ on $\{x_3 = 0\}$. $\square$

Remark 5.5. The regularity $W^{3,\infty}$ of the curve γ is fully exploited in (i) of Corollary 5.4. Indeed, $\partial_1 W^\varepsilon_{21}$ involves $\partial_1 g^\varepsilon_1$, which, in turn, involves the derivative of the curvature κ of γ. Thus, under the $W^{3,\infty}$ regularity of the curve γ we have that $\partial_1 g^\varepsilon_1$ is in L^∞ and $\partial_1 W^\varepsilon_{21}$ is an L^2 function.

If the regularity of the curve γ were assumed to be $W^{2,\infty}$, we could only claim that W^ε_{21} weakly converges in $L^2((0,\ell); H^1(0,L))$. Thus, a weakening of the regularity of γ also weakens the convergence of W^ε_{21}.

5.1. Limit of rescaled displacements. Since the limit of u^ε is equal to zero, we look at the following rescaled components of u^ε:

$$\boxed{\bar{v}^\varepsilon := \frac{u^\varepsilon - u^\varepsilon_3 e_3}{\delta_\varepsilon/\varepsilon}, \qquad v^\varepsilon_3 := \frac{u^\varepsilon_3}{\delta_\varepsilon}.} \tag{5.6}$$

To measure the slenderness of the cross section we introduce the parameter $\mathfrak{s}$ defined by

$$\mathfrak{s} := \lim_{\varepsilon\to 0} \frac{\varepsilon^2}{\delta_\varepsilon},$$

where we have assumed that the above limit exists. Without loss of generality, it suffices to consider three cases $\mathfrak{s} \in \{0, 1, +\infty\}$. In this paper we consider only the cases

$$\mathfrak{s} \in \{0, 1\}.$$

Let

$$\gamma_G := \fint_0^\ell \gamma(x_1)\, dx_1.$$

LEMMA 5.6. *Up to a subsequence we have*

$$\frac{W^\varepsilon e_3}{\varepsilon} - \fint_0^\ell \frac{W^\varepsilon e_3}{\varepsilon}\, dx_1 \rightharpoonup \partial_3\vartheta e_3 \wedge (\gamma - \gamma_G)$$

in $H^1((0,\ell); L^2((0,L); \mathbb{R}^3))$.

Proof. Let

$$\mathfrak{b}^\varepsilon := \frac{W^\varepsilon e_3}{\varepsilon} - \fint_0^\ell \frac{W^\varepsilon e_3}{\varepsilon}\, dx_1.$$

By Poincare's inequality and (iii) of Theorem 5.1 it follows that $\mathfrak{b}^\varepsilon$ is bounded in $H^1((0,\ell);L^2(0,L))$. Thus, there exists a $\mathfrak{b}\in H^1((0,\ell);L^2((0,L);\mathbb{R}^3))$ such that

$$\mathfrak{b}^\varepsilon \rightharpoonup \mathfrak{b}$$

in $H^1((0,\ell);L^2((0,L);\mathbb{R}^3))$, and

$$\fint_0^\ell \mathfrak{b}\,dx_1 = 0. \tag{5.7}$$

Since $\partial_1\mathfrak{b}^\varepsilon = \partial_1 W^\varepsilon e_3/\varepsilon$, from (5.3) we deduce that $\partial_1\mathfrak{b} = Be_3$. Thus, by (iii) of Corollary 5.4 we have that

$$\partial_1\mathfrak{b} = \partial_3\vartheta n = \partial_3\vartheta e_3\wedge t = \partial_1(\partial_3\vartheta\, e_3\wedge\gamma),$$

and from this identity and (5.7) we find $\mathfrak{b} = \partial_3\vartheta e_3\wedge(\gamma-\gamma_G)$. ∎

LEMMA 5.7. *For $\mathfrak{s}\in\{0,1\}$, we have that*

$$\bar v^\varepsilon - \fint_\omega \bar v^\varepsilon\,da \rightharpoonup \mathfrak{s}\,\vartheta e_3\wedge(\gamma-\gamma_G)$$

in $H^1(\Omega;\mathbb{R}^3)$.

Proof. By (i) of Theorem 5.1 we have that

$$\left\|\frac{H^\varepsilon u^\varepsilon e_3}{\delta_\varepsilon/\varepsilon} - \frac{W^\varepsilon e_3}{\delta_\varepsilon/\varepsilon}\right\|_{L^2(\Omega)} \le C\varepsilon, \tag{5.8}$$

and by Jensen's inequality we then have that

$$\left\|\fint_\omega \frac{H^\varepsilon u^\varepsilon e_3}{\delta_\varepsilon/\varepsilon} - \frac{W^\varepsilon e_3}{\delta_\varepsilon/\varepsilon}\,da\right\|_{L^2(0,L)} \le C\varepsilon. \tag{5.9}$$

Since

$$\begin{aligned}\frac{\partial_3 u^\varepsilon}{\delta_\varepsilon/\varepsilon} - \fint_\omega \frac{\partial_3 u^\varepsilon}{\delta_\varepsilon/\varepsilon}\,da &= \frac{H^\varepsilon u^\varepsilon e_3}{\delta_\varepsilon/\varepsilon} - \fint_\omega \frac{H^\varepsilon u^\varepsilon e_3}{\delta_\varepsilon/\varepsilon}\,da\\ &= \frac{H^\varepsilon u^\varepsilon e_3}{\delta_\varepsilon/\varepsilon} - \frac{W^\varepsilon e_3}{\delta_\varepsilon/\varepsilon} - \fint_\omega \frac{H^\varepsilon u^\varepsilon e_3}{\delta_\varepsilon/\varepsilon} - \frac{W^\varepsilon e_3}{\delta_\varepsilon/\varepsilon}\,da\\ &\quad + \left(\frac{W^\varepsilon e_3}{\varepsilon} - \fint_\omega \frac{W^\varepsilon e_3}{\varepsilon}\,da\right)\frac{\varepsilon^2}{\delta_\varepsilon},\end{aligned} \tag{5.10}$$

by taking into account (5.1), (5.6), (5.8), (5.9), and Lemma 5.6 we deduce that

$$\partial_3\left(\bar v^\varepsilon - \fint_\omega \bar v^\varepsilon\,da\right) \rightharpoonup \mathfrak{s}\partial_3\big(\vartheta e_3\wedge(\gamma-\gamma_G)\big)$$

in $L^2(\Omega;\mathbb{R}^3)$. In particular, it follows that the sequence $\check v^\varepsilon := \bar v^\varepsilon - \fint_\omega \bar v^\varepsilon\,da$ is bounded in $H^1((0,L);L^2(\omega;\mathbb{R}^3))$, hence $\check v^\varepsilon \rightharpoonup \check v$ in $H^1((0,L);L^2(\omega;\mathbb{R}^3))$, up to a subsequence. Since $\partial_3(\check v - \mathfrak{s}\vartheta e_3\wedge(\gamma-\gamma_G)) = 0$ and $\check v - \mathfrak{s}\vartheta e_3\wedge(\gamma-\gamma_G) = 0$ on $\{x_3=0\}$, it follows that $\check v = \mathfrak{s}\,\vartheta e_3\wedge(\gamma-\gamma_G)$.

To conclude the proof it suffices to show that the sequences $\{\partial_1\check v^\varepsilon\}$ and $\{\partial_2\check v^\varepsilon\}$ are bounded in $L^2(\Omega;\mathbb{R}^3)$. By means of (4.5) we find

$$\big(H^\varepsilon u^\varepsilon - W^\varepsilon\big)g_1^\varepsilon = \frac{1}{\varepsilon}\partial_1 u^\varepsilon - W^\varepsilon g_1^\varepsilon = \frac{1}{\varepsilon}\partial_1\left(u^\varepsilon - \fint_\omega u^\varepsilon\,da\right) - W^\varepsilon g_1^\varepsilon;$$

thus, by the definition of $\check{v}^\varepsilon$, (5.6), (4.4), and from (i)–(ii) of Theorem 5.1, we find

$$\|\partial_1 \check{v}^\varepsilon\|_{L^2(\Omega)} \le C\frac{\varepsilon^2}{\delta_\varepsilon}(\|(H^\varepsilon u^\varepsilon - W^\varepsilon)g_1^\varepsilon\|_{L^2(\Omega)} + \|W^\varepsilon g_1^\varepsilon\|_{L^2(\Omega)}) \le C\frac{\varepsilon^2}{\delta_\varepsilon},$$

which is bounded for $\mathfrak{s} \in \{0,1\}$. Similarly we find

$$\|\partial_2 \check{v}^\varepsilon\|_{L^2(\Omega)} \le \varepsilon(\|(H^\varepsilon u^\varepsilon - W^\varepsilon)g_2^\varepsilon\|_{L^2(\Omega)} + \|W^\varepsilon g_2^\varepsilon\|_{L^2(\Omega)}) \le C\varepsilon. \qquad \square$$

THEOREM 5.8. *Let $\mathfrak{s} \in \{0,1\}$. There exists $\bar{m} \in H^1_{dn}((0,L);\mathbb{R}^3)$ such that*

$$\fint_\omega \bar{v}^\varepsilon \, da \rightharpoonup \bar{m}$$

in $H^1_{dn}((0,L);\mathbb{R}^3)$, up to a subsequence. Moreover, there exists $m_3 \in L^2(0,L)$ such that, setting

$$\bar{v} := \bar{m} + \mathfrak{s}\vartheta e_3 \wedge (\gamma - \gamma_G), \tag{5.11}$$

$$v_3 := m_3 - \partial_3 \bar{m} \cdot (\gamma - \gamma_G) + \mathfrak{s}\,\partial_3\vartheta \int_0^{x_1} (\gamma - \gamma_G) \cdot n \, ds, \tag{5.12}$$

up to a subsequence we have

(i) $\bar{v}^\varepsilon \rightharpoonup \bar{v}$ *in* $H^1_{dn}(\Omega;\mathbb{R}^3)$,

(ii) $v_3^\varepsilon \rightharpoonup v_3$ *in* $H^1_{dn}(\Omega)$.

Proof. Since

$$+\infty > \sup_\varepsilon \left\| \frac{(E^\varepsilon u^\varepsilon)_{33}}{\delta_\varepsilon} \right\|_{L^2(\Omega)} = \sup_\varepsilon \left\| \frac{\partial_3 u_3^\varepsilon}{\delta_\varepsilon} \right\|_{L^2(\Omega)} = \sup_\varepsilon \left\| \partial_3 v_3^\varepsilon \right\|_{L^2(\Omega)},$$

by the Poincaré inequality we have that

$$\sup_\varepsilon \|v_3^\varepsilon\|_{H^1((0,L);L^2(\omega))} < +\infty, \tag{5.13}$$

and there exists $v_3 \in H^1((0,L);L^2(\omega))$ such that, up to a subsequence, $v_3^\varepsilon \rightharpoonup v_3$ in $H^1((0,L);L^2(\omega))$. Also, by (4.8) and (4.9) we have

$$\partial_2 v_3^\varepsilon = g_3^\varepsilon \cdot \frac{\partial_2 u^\varepsilon}{\delta_\varepsilon} = (H^\varepsilon u^\varepsilon)_{32} = 2(E^\varepsilon u^\varepsilon)_{32} - (H^\varepsilon u^\varepsilon)_{23}.$$

By (5.1), (i) of Corollary 5.3, and (ii) of Corollary 5.4, this implies that

$$\partial_2 v_3^\varepsilon \to W_{23} = 0 \text{ in } L^2(\Omega).$$

Thus

$$v_3^\varepsilon \rightharpoonup v_3 \tag{5.14}$$

in $H^1((-h/2,h/2)\times(0,L);L^2(0,\ell))$ and

$$\partial_2 v_3 = 0. \tag{5.15}$$

Let

$$\bar{m}^\varepsilon := \fint_\omega \bar{v}^\varepsilon \, da.$$

From (4.8) and (4.9) we have that

$$\frac{2(E^\varepsilon u^\varepsilon)_{13}}{\delta_\varepsilon/\varepsilon} = \frac{1}{\delta_\varepsilon} g_3^\varepsilon \cdot \partial_1 u^\varepsilon + \frac{1}{\delta_\varepsilon/\varepsilon} g_1^\varepsilon \cdot \partial_3 u^\varepsilon = \partial_1 v_3^\varepsilon + g_1^\varepsilon \cdot \partial_3 \bar{v}^\varepsilon$$
$$= \partial_1 v_3^\varepsilon + g_1^\varepsilon \cdot \partial_3 \bar{m}^\varepsilon + g_1^\varepsilon \cdot \partial_3 (\bar{v}^\varepsilon - \bar{m}^\varepsilon). \tag{5.16}$$

Let

$$h^\varepsilon := \frac{2(E^\varepsilon u^\varepsilon)_{13}}{\delta_\varepsilon/\varepsilon} - g_1^\varepsilon \cdot \partial_3 (\bar{v}^\varepsilon - \bar{m}^\varepsilon) = \partial_1 v_3^\varepsilon + g_1^\varepsilon \cdot \partial_3 \bar{m}^\varepsilon$$

and note that, by (5.1) and Lemma 5.7, we have that

$$\sup_\varepsilon \|h^\varepsilon\|_{L^2(\Omega)} < +\infty. \tag{5.17}$$

Let $\psi \in C_0^\infty(0,\ell)$, let $\varphi \in L^2(0,L)$ with $\|\varphi\|_{L^2(0,L)} \le 1$, and denote by

$$M_\varphi^\varepsilon := \int_0^L \partial_3 \bar{m}^\varepsilon \varphi \, dx_3.$$

We then have

$$\int_\Omega h^\varepsilon \psi \varphi \, dx = \int_\Omega \partial_1 v_3^\varepsilon \psi \varphi + g_1^\varepsilon \cdot \partial_3 \bar{m}^\varepsilon \psi \varphi \, dx$$
$$= -\int_\Omega v_3^\varepsilon \partial_1 \psi \varphi \, dx + \int_\omega M_\varphi^\varepsilon \cdot g_1^\varepsilon \psi \, da$$

and therefore

$$\left| \int_\omega M_\varphi^\varepsilon \cdot g_1^\varepsilon \psi \, da \right| \le \|\psi\|_{W^{1,\infty}(0,\ell)} (\|h^\varepsilon\|_{L^2(\Omega)} + \|v_3^\varepsilon\|_{L^2(\Omega)}).$$

Since

$$\int_\omega M_\varphi^\varepsilon \cdot g_1^\varepsilon \psi \, da = M_\varphi^\varepsilon \cdot \int_\omega g_1^\varepsilon \psi \, da = M_\varphi^\varepsilon \cdot \int_\omega t \psi \, da,$$

we find that

$$\left| M_\varphi^\varepsilon \cdot \int_\omega t \psi \, da \right| \le \|\psi\|_{W^{1,\infty}(0,\ell)} (\|h^\varepsilon\|_{L^2(\Omega)} + \|v_3^\varepsilon\|_{L^2(\Omega)}).$$

Since t is not constant, by choosing two appropriate functions ψ one can show that

$$|M_\varphi^\varepsilon| \le C(\|h^\varepsilon\|_{L^2(\Omega)} + \|v_3^\varepsilon\|_{L^2(\Omega)}),$$

which implies that

$$\|\partial_3 \bar{m}^\varepsilon\|_{L^2(0,L)} = \sup_{\|\varphi\|_{L^2(0,L)} \le 1} |M_\varphi^\varepsilon| \le C(\|h^\varepsilon\|_{L^2(\Omega)} + \|v_3^\varepsilon\|_{L^2(\Omega)}).$$

Thus, taking into account that $\bar{v}^\varepsilon \in H^1_{dn}(\Omega;\mathbb{R}^3)$ and using (5.13) and (5.17), we deduce that $\sup_\varepsilon \|\bar{m}^\varepsilon\|_{H^1(0,L)} < +\infty$, and hence, up to a subsequence,

$$\bar{m}^\varepsilon \rightharpoonup \bar{m}$$

in $H^1_{dn}(0,L)$, which is the first part of the statement. By Lemma 5.7 then we have

$$\bar{v}^\varepsilon \rightharpoonup \bar{m} + \mathfrak{s}\vartheta e_3 \wedge (\gamma - \gamma_G) \tag{5.18}$$

in $H^1_{dn}(\Omega;\mathbb{R}^3)$, which proves (i).

By (5.16) it follows that

$$\partial_1 v_3^\varepsilon = \frac{2(E^\varepsilon u^\varepsilon)_{13}}{\delta_\varepsilon/\varepsilon} - g_1^\varepsilon \cdot \partial_3 \bar{v}^\varepsilon. \tag{5.19}$$

Hence, also $\partial_1 v_3^\varepsilon$ is bounded in $L^2(\Omega)$ and the convergence in (5.14) is, in fact, weak in $H^1(\Omega)$, as stated in (ii). By using (5.1) and (5.18) to take the limit in (5.19) we deduce that

$$\begin{aligned}\partial_1 v_3 &= -t \cdot \partial_3(\bar{m} + \mathfrak{s}\,\vartheta e_3 \wedge (\gamma - \gamma_G)) = -t \cdot \partial_3 \bar{m} + \mathfrak{s}\partial_3\vartheta(\gamma - \gamma_G)\cdot n \\ &= \partial_1\left(-\partial_3\bar{m}\cdot(\gamma-\gamma_G) + \mathfrak{s}\,\partial_3\vartheta \int_0^{x_1} (\gamma-\gamma_G)\cdot n\,ds\right).\end{aligned}$$

Taking into account (5.15), we conclude that

$$v_3 = m_3 - \partial_3\bar{m}\cdot(\gamma-\gamma_G) + \mathfrak{s}\,\partial_3\vartheta \int_0^{x_1} (\gamma-\gamma_G)\cdot n\,ds \tag{5.20}$$

with $m_3 \in L^2(0,L)$. ∎

In fact, (5.11) and (5.12) imply further regularity on m_3, $\bar{m}$, and ϑ.

THEOREM 5.9. *Let $\mathfrak{s}$, m_3, $\bar{m}$, and ϑ be as in Theorem 5.8. Then,*

(i) $m_3 \in H^1_{dn}(0,L)$,

(ii) $\bar{m} \in H^2_{dn}(0,L;\mathbb{R}^3) := \{z \in H^2(0,L;\mathbb{R}^3) : z(0) = \partial_3 z(0) = 0\}$,

(iii) *if $\mathfrak{s} = 1$, then $\vartheta \in H^2_{dn}(0,L)$. In particular, the displacement $\bar{v}$ defined in* (5.11) *belongs to the space $H^2((0,\ell)\times(0,L);\mathbb{R}^3)$.*

Proof. Let us consider the case $\mathfrak{s} = 0$ first. To prove that $m_3 \in H^1_{dn}(0,L)$ it is enough to take the integral over $(0,\ell)$ with respect to the variable x_1 in (5.12). In this way we get $m_3 = \fint_0^\ell v_3\,dx_1$, which implies $m_3 \in H^1_{dn}(0,L)$ because $v_3 \in H^1_{dn}(\Omega)$. Statement (ii) can be proved similarly. Indeed, since the curve γ is $W^{3,\infty}$ and not a straight line, then there exist x_1', $x_1'' \in (0,\ell)$ such that the vectors $\int_0^{x_1'}(\gamma-\gamma_G)\,ds$ and $\int_0^{x_1''}(\gamma-\gamma_G)\,ds$ are linearly independent and can be used as a basis in the plane $x_3 = 0$. Then (ii) follows by integrating (5.12) with respect to x_1 over the intervals $(0,x_1')$ and $(0,x_1'')$ and by taking a linear combination.

Consider now the case $\mathfrak{s} = 1$. Without loss of generality we may take the origin of the axes coincident with γ_G, that is, $\gamma_G = 0$, and rotate axes e_1, e_2, if necessary, so that they coincide with the principal axes of inertia of the curve γ:

$$\int_0^\ell \gamma_1\gamma_2\,dx_1 = 0.$$

We also introduce a point γ_{SC} in the plane of the cross section and a scalar c to be chosen in what follows. Then, by means of the identity

$$\int_0^{x_1} \gamma\cdot n\,ds = \int_0^{x_1} (\gamma-\gamma_{SC})\cdot n\,ds + \gamma_{SC}\cdot e_3 \wedge (\gamma - \gamma(0)), \tag{5.21}$$

the displacement v can be written as

$$\bar{v} = \bar{\xi} + \vartheta e_3 \wedge (\gamma - \gamma_{SC}), \qquad v_3 = \xi_3 - \partial_3 \bar{\xi} \cdot \gamma + \psi \partial_3 \vartheta, \tag{5.22}$$

where

$$\psi := c + \int_0^{x_1} (\gamma - \gamma_{SC}) \cdot n \, ds, \tag{5.23}$$

$$\bar{\xi} := \bar{m} + \vartheta e_3 \wedge \gamma_{SC} \in H^1_{dn}((0,L);\mathbb{R}^3), \tag{5.24}$$

$$\xi_3 := m_3 - \partial_3 \vartheta \big(c + e_3 \wedge \gamma(0) \cdot \gamma_{SC}\big) \in L^2(0,L). \tag{5.25}$$

By means of (5.21) it can be shown that γ_{SC} and c are uniquely determined by the requirements

$$\int_\omega \psi \, da = \int_\omega \psi \gamma_1 \, da = \int_\omega \psi \gamma_2 \, da = 0. \tag{5.26}$$

For such a choice of γ_{SC} and c, from (5.22) and (5.26) we deduce that

$$\int_\omega \psi v_3 \, da = \int_\omega \psi^2 \, da \, \partial_3 \vartheta,$$

hence $\vartheta \in H^2_{dn}(0,L)$, and that

$$\fint_\omega v_3 \, da = \xi_3.$$

Then $\xi_3 \in H^1_{dn}(0,L)$, since the left-hand side of the above equality is in $H^1_{dn}(0,L)$. By (5.25), this implies in particular that $m_3 \in H^1_{dn}(0,L)$. Finally, we deduce from (5.22) that $\bar{\xi} \in H^2_{dn}((0,L);\mathbb{R}^3)$. The claimed regularity of $\bar{m}$ follows from (5.24). ∎

In the technical literature the point γ_{SC} defined by (5.26) is called the *shear center* and plays a special role in the uncoupling of the torsional and flexural effects. Also, ψ describes the warping of the cross section, and the scalar c introduced in (5.23) defines the warping at point $x_1 = 0$ on the curve γ.

5.2. Limit of rescaled strains. From (5.1) it follows that there exists $E \in L^2(\Omega;\mathbb{R}^{3\times 3})$ such that

$$\frac{E^\varepsilon u^\varepsilon}{\delta_\varepsilon} \rightharpoonup E \text{ in } L^2(\Omega;\mathbb{R}^{3\times 3}) \tag{5.27}$$

up to a subsequence. The following lemmas give a characterization of some components of E.

LEMMA 5.10. *Let $E_{33} := e_3 \cdot E e_3$. Then*

$$E_{33} = \partial_3 v_3.$$

Proof. Indeed, from (4.8), (4.9), and (5.6), we have

$$\frac{(E^\varepsilon u^\varepsilon)_{33}}{\delta_\varepsilon} = \frac{g_3^\varepsilon \cdot \partial_3 u^\varepsilon}{\delta_\varepsilon} = \partial_3 v_3^\varepsilon$$

and the thesis follows by applying Theorem 5.8. ∎

LEMMA 5.11. *Let $E_{13} := t \cdot E e_3$. Then*

$$E_{13} = -x_2 \, \partial_3 \vartheta + \eta_2,$$

where $\eta_2 \in L^2(\Omega)$ and $\partial_2 \eta_2 = 0$.

Proof. Let

$$\vartheta^\varepsilon := \frac{(H^\varepsilon u^\varepsilon)_{21} - (H^\varepsilon u^\varepsilon)_{12}}{2}.$$

We claim that

$$\partial_3 \vartheta^\varepsilon = \frac{1}{\varepsilon}\partial_1 (E^\varepsilon u^\varepsilon)_{23} - \frac{1}{\delta_\varepsilon}\partial_2 (E^\varepsilon u^\varepsilon)_{13}, \tag{5.28}$$

in the sense of distributions. Assuming this, note that

$$\vartheta^\varepsilon = (H^\varepsilon u^\varepsilon)_{21} - (E^\varepsilon u^\varepsilon)_{21} \to \vartheta \text{ in } L^2(\Omega)$$

by (5.1), (i) of Corollary 5.3, and the definition of ϑ (see Corollary 5.4). Thus, using (5.27) to take the limit in H^{-1} in (5.28), we find

$$\partial_3 \vartheta = -\partial_2 E_{13}.$$

The statement of the lemma follows from the equality above.

Let us now prove (5.28). Since

$$2\vartheta^\varepsilon = \frac{1}{\varepsilon} g_2^\varepsilon \cdot \partial_1 u^\varepsilon - \frac{1}{\delta_\varepsilon} g_1^\varepsilon \cdot \partial_2 u^\varepsilon,$$

we have that

$$\begin{aligned} 2\partial_3 \vartheta^\varepsilon &= \frac{1}{\varepsilon} g_2^\varepsilon \cdot \partial_1 \partial_3 u^\varepsilon - \frac{1}{\delta_\varepsilon} g_1^\varepsilon \cdot \partial_2 \partial_3 u^\varepsilon \\ &= \partial_1 \left(\frac{1}{\varepsilon} g_2^\varepsilon \cdot \partial_3 u^\varepsilon \right) - \frac{1}{\varepsilon} \partial_1 g_2^\varepsilon \cdot \partial_3 u^\varepsilon - \partial_2 \left(\frac{1}{\delta_\varepsilon} g_1^\varepsilon \cdot \partial_3 u^\varepsilon \right) + \frac{1}{\delta_\varepsilon} \partial_2 g_1^\varepsilon \cdot \partial_3 u^\varepsilon. \end{aligned}$$

Since $\partial_2 g_1^\varepsilon = (\delta_\varepsilon/\varepsilon)\partial_1 g_2^\varepsilon$, then

$$\begin{aligned} 2\partial_3 \vartheta^\varepsilon &= \partial_1 \left(\frac{1}{\varepsilon} g_2^\varepsilon \cdot \partial_3 u^\varepsilon \right) - \partial_2 \left(\frac{1}{\delta_\varepsilon} g_1^\varepsilon \cdot \partial_3 u^\varepsilon \right) = \frac{1}{\varepsilon}\partial_1 (H^\varepsilon u^\varepsilon)_{23} - \frac{1}{\delta_\varepsilon}\partial_2 (H^\varepsilon u^\varepsilon)_{13} \\ &= \frac{1}{\varepsilon}\partial_1 (2E^\varepsilon u^\varepsilon)_{23} - \frac{1}{\varepsilon}\partial_1 (H^\varepsilon u^\varepsilon)_{32} - \frac{1}{\delta_\varepsilon}\partial_2 (2E^\varepsilon u^\varepsilon)_{13} + \frac{1}{\delta_\varepsilon}\partial_2 (H^\varepsilon u^\varepsilon)_{31} \\ &= \frac{1}{\varepsilon}\partial_1 (2E^\varepsilon u^\varepsilon)_{23} - \frac{1}{\delta_\varepsilon}\partial_2 (2E^\varepsilon u^\varepsilon)_{13} + \frac{1}{\delta_\varepsilon}\partial_2 \left(\frac{1}{\varepsilon} g_3^\varepsilon \cdot \partial_1 u^\varepsilon \right) - \frac{1}{\varepsilon}\partial_1 \left(\frac{1}{\delta_\varepsilon} g_3^\varepsilon \cdot \partial_2 u^\varepsilon \right) \\ &= \frac{1}{\varepsilon}\partial_1 (2E^\varepsilon u^\varepsilon)_{23} - \frac{1}{\delta_\varepsilon}\partial_2 (2E^\varepsilon u^\varepsilon)_{13}, \end{aligned}$$

and hence (5.28) has been proved. ∎

LEMMA 5.12. *Let $E_{11} := t \cdot Et$. Then,*

$$E_{11} = x_2\, \eta_3 + \eta_1 \tag{5.29}$$

with $\eta_1 \in L^2(\Omega)$, $\eta_3 = t \cdot Bn$, and $\partial_2 \eta_1 = \partial_2 \eta_3 = 0$.

Proof. Note that

$$\begin{aligned} \frac{1}{\delta_\varepsilon}\partial_2 (H^\varepsilon u^\varepsilon g_1^\varepsilon) = \frac{1}{\delta_\varepsilon}\partial_2 \frac{\partial_1 u^\varepsilon}{\varepsilon} = \frac{1}{\varepsilon}\partial_1 \frac{\partial_2 u^\varepsilon}{\delta_\varepsilon} &= \frac{1}{\varepsilon}\partial_1 (H^\varepsilon u^\varepsilon g_2^\varepsilon) \\ &= \partial_1 \left(\frac{H^\varepsilon u^\varepsilon}{\varepsilon} \right) g_2^\varepsilon + \frac{1}{\varepsilon} H^\varepsilon u^\varepsilon \partial_1 g_2^\varepsilon, \end{aligned}$$

and by means of this identity we have that

$$\partial_2 \frac{(E^\varepsilon u^\varepsilon)_{11}}{\delta_\varepsilon} = \frac{1}{\delta_\varepsilon}\partial_2(g_1^\varepsilon \cdot H^\varepsilon u^\varepsilon g_1^\varepsilon) = \frac{1}{\delta_\varepsilon}\partial_2 g_1^\varepsilon \cdot H^\varepsilon u^\varepsilon g_1^\varepsilon + \frac{1}{\delta_\varepsilon} g_1^\varepsilon \cdot \partial_2(H^\varepsilon u^\varepsilon g_1^\varepsilon)$$
$$= \frac{1}{\delta_\varepsilon}\partial_2 g_1^\varepsilon \cdot H^\varepsilon u^\varepsilon g_1^\varepsilon + g_1^\varepsilon \cdot \partial_1 \left(\frac{H^\varepsilon u^\varepsilon}{\varepsilon}\right) g_2^\varepsilon + \frac{1}{\varepsilon} g_1^\varepsilon \cdot H^\varepsilon u^\varepsilon \partial_1 g_2^\varepsilon.$$

Since

$$\partial_1 g_2^\varepsilon = \frac{\varepsilon}{\delta_\varepsilon}\partial_2 g_1^\varepsilon = -\frac{\kappa}{1-(\delta_\varepsilon/\varepsilon)x_2\kappa} g_1^\varepsilon,$$

we deduce that

$$\partial_2 \frac{(E^\varepsilon u^\varepsilon)_{11}}{\delta_\varepsilon} = g_1^\varepsilon \cdot \partial_1 \frac{H^\varepsilon u^\varepsilon}{\varepsilon} g_2^\varepsilon - \frac{\delta_\varepsilon}{\varepsilon}\frac{2\kappa}{1-(\delta_\varepsilon/\varepsilon)x_2\kappa}\frac{(E^\varepsilon u^\varepsilon)_{11}}{\delta_\varepsilon}. \tag{5.30}$$

From (i) of Theorem 5.1 and (5.3) it follows that

$$\partial_1 \frac{H^\varepsilon u^\varepsilon}{\varepsilon} \to B \text{ in } H^{-1}(\Omega;\mathbb{R}^{3\times 3}),$$

and from (5.27) we have

$$\partial_2 \frac{(E^\varepsilon u^\varepsilon)_{11}}{\delta_\varepsilon} \rightharpoonup \partial_2 E_{11} \text{ in } H^{-1}(\Omega).$$

Hence from (5.30) we deduce that

$$\partial_2 E_{11} = t \cdot Bn.$$

Since B, t, and n do not depend on x_2 we have the claim. ∎

6. Reduced energy densities for open cross sections. In this section we introduce and study some properties of two reduced energy densities that will appear in the Γ-convergence result presented in the next section.

Lemmas 5.10, 5.11, and 5.12, give a partial characterization of the components $E_{33} = e_3 \cdot Ee_3$, $E_{13} = t \cdot Ee_3$, and $E_{11} = t \cdot Et$ of the limit strain E defined by (5.27). No information is instead given on the components $E_{12} = t \cdot En$, $E_{22} = n \cdot En$, and $E_{23} = n \cdot Ee_3$. Motivated by this fact, with

$$f(x,M) := \frac{1}{2}\mathbb{C}(x)M \cdot M, \quad M \in \mathbb{R}^{3\times 3}_{\text{sym}},$$

we define

$$\begin{aligned} f_0(x, M_{11}, M_{13}, M_{33}) := \min_{A_{ij}} f\big(x, &M_{11}t(x_1)\odot t(x_1) + 2A_{12}t(x_1)\odot n(x_1) \\ &+ 2M_{13}t(x_1)\odot e_3 + A_{22}n(x_1)\odot n(x_1) \\ &+ 2A_{23}n(x_1)\odot e_3 + M_{33}e_3 \odot e_3\big). \end{aligned} \tag{6.1}$$

That is, f_0 is obtained from f by keeping fixed the components that have been partially characterized in section 5.2 and by minimizing over the remaining components.

For open cross sections by Lemmas 5.10, 5.11, and 5.12, we have that

$$E_{11} = \eta_1 + x_2\eta_3, \quad E_{13} = -x_2\partial_3\vartheta + \eta_2, \quad E_{33} = \partial_3 v_3,$$

where $\eta_i \in L^2(\Omega)$, $i = 1, 2, 3$, are functions of (x_1, x_3) that have not been characterized in terms of v_3 and ϑ. This leads us to a second minimization and hence to the definition of a second reduced energy density. In contrast to the minimization performed in (6.1), the minimization over η_i is not completely local because of the presence of the variable x_2 in E_{11} and E_{13}. For x_1 and x_3 fixed and a, $b \in \mathbb{R}$, let $\eta_i^{\mathrm{opt}} = \eta_i^{\mathrm{opt}}(x_1, x_3, a, b)$ be the minimizers of

$$\inf_{\eta_i \in \mathbb{R}} \int_{-h/2}^{h/2} f_0(x, \eta_1 + x_2\eta_3, -x_2 a + \eta_2, b)\, dx_2. \tag{6.2}$$

In section 6.2 it is proved that η_i^{opt}, for $i = 1, 2, 3$, are unique and that they can be written as a linear combination of a and b with L^∞-coefficients. In particular, the maps $\eta_i^{\mathrm{opt}} : (0, \ell) \times (0, L) \times \mathbb{R} \times \mathbb{R} \to \mathbb{R}$ defined by

$$(x_1, x_3, a, b) \mapsto \eta_i^{\mathrm{opt}}(x_1, x_3, a, b)$$

are measurable. Then we can define the function $f_{00} : \Omega \times \mathbb{R} \times \mathbb{R} \to \mathbb{R}$ as

$$f_{00}(x, a, b) := f_0(x, \eta_1^{\mathrm{opt}} + x_2\eta_3^{\mathrm{opt}}, -x_2 a + \eta_2^{\mathrm{opt}}, b), \tag{6.3}$$

where the η_i^{opt} are evaluated in (x_1, x_3, a, b).

From the definition of f_0 it follows that there exists a constant $c > 0$ such that

$$f_0(x, M_{11}, M_{13}, M_{33}) \geq c\,(M_{11}^2 + 2M_{13}^2 + M_{33}^2), \tag{6.4}$$

and from this inequality and the definition of f_{00} we deduce that there exists a constant $c > 0$ such that

$$\int_{-h/2}^{h/2} f_{00}(x, a, b)\, dx_2 \geq c\,(a^2 + b^2). \tag{6.5}$$

The given definitions are sufficient to prove the so-called liminf inequality (see Theorem 7.1). On the other hand, to provide the so-called recovery sequence (see Theorem 7.2) several properties of f_0, f_{00} and their minimizers are needed. These properties will be determined in the next lemmas.

In order to keep the notation compact we shall not use the components of E, as done in (6.1) and (6.3), but work with tensors. For fixed x_1, let

$$\mathcal{S}(x_1) := \operatorname{span}\{t(x_1) \odot n(x_1), n(x_1) \odot n(x_1), n(x_1) \odot e_3\}$$

and

$$\mathcal{S}^\perp(x_1) := \operatorname{span}\{t(x_1) \odot t(x_1), t(x_1) \odot e_3, e_3 \odot e_3\}$$

so that

$$\mathbb{R}^{3\times 3}_{\mathrm{sym}} = \mathcal{S}(x_1) \oplus \mathcal{S}^\perp(x_1).$$

Thus any tensor $M \in \mathbb{R}^{3\times 3}_{\mathrm{sym}}$ can be uniquely written as

$$M = M^{\mathcal{S}} + M^\perp$$

with

$$M^{\mathcal{S}} := 2(t \cdot Mn)\, t \odot n + (n \cdot Mn)\, n \odot n + 2(n \cdot Me_3)\, n \odot e_3 \in \mathcal{S}(x_1)$$

and

$$M^{\perp} := (t \cdot Mt)\, t \odot t + 2(t \cdot Me_3)\, t \odot e_3 + (e_3 \cdot Me_3)\, e_3 \odot e_3 \in \mathcal{S}^{\perp}(x_1).$$

The decomposition of E, as given by (5.27), is such that $E^{\perp}$ contains the components of the strain E that have been partially characterized by Lemmas 5.10, 5.11, and 5.12, and $E^{\mathcal{S}}$ contains the remaining components. With a slight abuse of notation we may write

$$f_0(x, M^{\perp}) = \min_{M^{\mathcal{S}} \in \mathcal{S}(x_1)} f(x, M^{\mathcal{S}} + M^{\perp}). \tag{6.6}$$

We shall denote by $\mathbb{E}_0 M^{\perp}$ the "full" tensor achieving the (unique) minimum in (6.6), i.e.,

$$\mathbb{E}_0 M^{\perp} := M_0^{\mathcal{S}} + M^{\perp} \quad \text{for} \quad f(x, M_0^{\mathcal{S}} + M^{\perp}) = \min_{M^{\mathcal{S}} \in \mathcal{S}(x_1)} f(x, M^{\mathcal{S}} + M^{\perp}). \tag{6.7}$$

Hence $\mathbb{E}_0$ maps the fixed part of the strain $M^{\perp}$ to the "full" minimizer of (6.6) as stated by (6.7). Since f is a quadratic function we have that $\mathbb{E}_0$ is a linear operator from $\mathcal{S}^{\perp}$ to $\mathbb{R}^{3\times 3}_{\mathrm{sym}}$. We also have

$$f_0(x, M^{\perp}) = f(x, \mathbb{E}_0 M^{\perp}) \tag{6.8}$$

and

$$(\mathbb{I} - \mathbb{P})\mathbb{E}_0 M^{\perp} = M^{\perp} \tag{6.9}$$

for every $M^{\perp} \in \mathcal{S}^{\perp}$, since $(\mathbb{I} - \mathbb{P})M^{\mathcal{S}} = 0$ for every $M^{\mathcal{S}} \in \mathcal{S}$. To write the mapping $\mathbb{E}_0$ explicitly, and in compact form, we introduce the projection operator

$$\begin{aligned} \mathbb{P}(x_1) : \mathbb{R}^{3\times 3}_{\mathrm{sym}} &\to \mathcal{S}(x_1), \\ M &\mapsto \mathbb{P}M := M^{\mathcal{S}}. \end{aligned} \tag{6.10}$$

Then $M^{\perp} = (\mathbb{I} - \mathbb{P})M$, where $\mathbb{I}$ denotes the identity.

LEMMA 6.1. *The mapping $\mathbb{E}_0$ defined by* (6.7) *is given by*

$$\mathbb{E}_0 = \mathbb{I} - (\mathbb{P}\mathbb{C}\mathbb{P})^{-1}\mathbb{P}\mathbb{C}. \tag{6.11}$$

Moreover, for every $M \in \mathbb{R}^{3\times 3}_{\mathrm{Sym}}$ we have that

$$\mathbb{P}\mathbb{C}M = 0 \text{ if and only if } M = \mathbb{E}_0 M^{\perp} \tag{6.12}$$

and

$$\mathbb{C}\mathbb{E}_0 M^{\perp} \cdot B^{\perp} = \mathbb{C}\mathbb{E}_0 M^{\perp} \cdot \mathbb{E}_0 B^{\perp} \text{ for every } B^{\perp} \in \mathcal{S}^{\perp}. \tag{6.13}$$

Proof. Set $\tilde{\mathbb{E}}_0 := \mathbb{I} - (\mathbb{P}\mathbb{C}\mathbb{P})^{-1}\mathbb{P}\mathbb{C}$. We first prove that (6.12) holds with $\tilde{\mathbb{E}}_0$ in place of $\mathbb{E}_0$. Note that $\mathbb{P}\mathbb{C}\mathbb{P} : \mathcal{S} \to \mathcal{S}$ is an invertible operator, since

$$\mathbb{P}\mathbb{C}\mathbb{P}U^{\mathcal{S}} \cdot U^{\mathcal{S}} = \mathbb{C}(\mathbb{P}U^{\mathcal{S}}) \cdot (\mathbb{P}U^{\mathcal{S}}) = \mathbb{C}U^{\mathcal{S}} \cdot U^{\mathcal{S}} \geq c|U^{\mathcal{S}}|^2,$$

where we used the facts $\mathbb{P}U^{\mathcal{S}} = U^{\mathcal{S}}$ for every $U^{\mathcal{S}} \in \mathcal{S}$ and $\mathbb{P}U \cdot V = \mathbb{P}V \cdot U$ for every $U, V \in \mathbb{R}^{3\times 3}_{\mathrm{sym}}$. Since $M = \mathbb{P}M + M^{\perp}$, then $\mathbb{P}\mathbb{C}M = 0$ holds if and only if

$$\mathbb{P}\mathbb{C}(\mathbb{P}M + M^{\perp}) = 0,$$

that is,

$$\mathbb{P}\mathbb{C}\mathbb{P}(\mathbb{P}M) = -\mathbb{P}\mathbb{C}M^{\perp}$$

or

$$\mathbb{P}M = -(\mathbb{P}\mathbb{C}\mathbb{P})^{-1}\mathbb{P}\mathbb{C}M^{\perp},$$

which is equivalent to

$$\mathbb{P}M + M^{\perp} = \tilde{\mathbb{E}}_0 M^{\perp}.$$

Thus, (6.12) holds for $\tilde{\mathbb{E}}_0$ in place of $\mathbb{E}_0$.

Let $M_0^{\mathcal{S}} \in \mathcal{S}(x_1)$ be the minimizer of (6.6), i.e.,

$$f(x, M_0^{\mathcal{S}} + M^{\perp}) = \min_{M^{\mathcal{S}} \in \mathcal{S}(x_1)} f(x, M^{\mathcal{S}} + M^{\perp}).$$

The minimality conditions for (6.6) are

$$\begin{cases} \mathbb{C}(M_0^{\mathcal{S}} + M^{\perp}) \cdot t \odot n = 0, \\ \mathbb{C}(M_0^{\mathcal{S}} + M^{\perp}) \cdot n \odot n = 0, \\ \mathbb{C}(M_0^{\mathcal{S}} + M^{\perp}) \cdot n \odot e_3 = 0, \end{cases}$$

that is, $\mathbb{P}\mathbb{C}(M_0^{\mathcal{S}} + M^{\perp}) = 0$. Thus, by (6.12) with $\tilde{\mathbb{E}}_0$ in place of $\mathbb{E}_0$, as proved above, we deduce that

$$M_0^{\mathcal{S}} + M^{\perp} = \tilde{\mathbb{E}}_0 M^{\perp},$$

and hence, from (6.7), we conclude that $\tilde{\mathbb{E}}_0 = \mathbb{E}_0$.

To prove (6.13) note that

$$\mathbb{C}\mathbb{E}_0 M^{\perp} \cdot B^{\perp} = \mathbb{C}\mathbb{E}_0 M^{\perp} \cdot (\mathbb{I} - \mathbb{P})\mathbb{E}_0 B^{\perp} = (\mathbb{I} - \mathbb{P})\mathbb{C}\mathbb{E}_0 M^{\perp} \cdot \mathbb{E}_0 B^{\perp} = \mathbb{C}\mathbb{E}_0 M^{\perp} \cdot \mathbb{E}_0 B^{\perp},$$

where the first identity follows from (6.9) while the last one has been obtained by applying (6.12). ∎

The previous lemma characterizes the minimizer of f_0. We now study the minimizers of f_{00}.

6.1. Properties of f_{00} for beams with an open cross section. Let E be the limit strain defined by (5.27). Then

$$E^{\perp} = (\eta_1 + x_2\eta_3)t \odot t + 2\eta_2 t \odot e_3 + E^K(\partial_3\vartheta, \partial_3 v_3),$$

where $E^K(\partial_3\vartheta, \partial_3 v_3)$ is the part of $E^{\perp}$ that is known in terms of v_3 and ϑ, that is,

$$E^K(a, b) := -2x_2 a\, t \odot e_3 + b\, e_3 \odot e_3, \tag{6.14}$$

for every a, $b \in \mathbb{R}$. By means of the minimizers $\eta_i^{\rm opt}$ of (6.2) we define the mapping $\mathbb{E}_{00}$ by

$$\mathbb{E}_{00}E^K(a,b) := (\eta_1^{\rm opt} + x_2\eta_3^{\rm opt})t \odot t + 2\eta_2^{\rm opt} t \odot e_3 + E^K(a,b), \tag{6.15}$$

so we rewrite (6.3), with the slight abuse of notation introduced in (6.6), as

$$f_{00}(x,a,b) = f_0(x, \mathbb{E}_{00}E^K(a,b)). \tag{6.16}$$

Thus $\mathbb{E}_{00}$ essentially associates to the known part of the strain the "full" minimizer of (6.2) as stated by (6.16).

Thus the mappings $\mathbb{E}_0$ and $\mathbb{E}_{00}$ allow us to rewrite the densities f_0 and f_{00} in terms of f

$$f_{00}(x,a,b) = f_0(x, \mathbb{E}_{00}E^K(a,b)) = f(x, \mathbb{E}_0\mathbb{E}_{00}E^K(a,b)), \tag{6.17}$$

as follows from (6.8) and (6.16).

Hereafter, to keep the notation compact, we denote by

$$\langle \cdot \rangle := \fint_{-h/2}^{h/2} \cdot dx_2$$

the average over the x_2 variable.

LEMMA 6.2. *For a, $b \in \mathbb{R}$ let $M \in \mathbb{R}^{3\times 3}_{\rm sym}$ be a tensor field such that*

$$M^\perp = (\eta_1 + x_2\eta_3)t \odot t + 2\eta_2 t \odot e_3 + E^K(a,b), \tag{6.18}$$

where $\eta_i = \eta_i(x_1, x_3, a, b)$ and E^K is defined by (6.14). *Then,*

$$M^\perp = \mathbb{E}_{00}E^K(a,b) \text{ (i.e., } \eta_i = \eta_i^{\rm opt}) \iff \begin{cases} \langle \mathbb{C}\mathbb{E}_0 M^\perp \rangle \cdot t \odot t = 0, \\ \langle \mathbb{C}\mathbb{E}_0 M^\perp \rangle \cdot t \odot e_3 = 0, \\ \langle x_2 \mathbb{C}\mathbb{E}_0 M^\perp \rangle \cdot t \odot t = 0. \end{cases} \tag{6.19}$$

Moreover, if $M^\perp = \mathbb{E}_{00}E^K(a,b)$, then

$$\langle \mathbb{C}\mathbb{E}_0\mathbb{E}_{00}E^K(a,b) \cdot E^K(c,d)\rangle = \langle \mathbb{C}\mathbb{E}_0\mathbb{E}_{00}E^K(a,b) \cdot \mathbb{E}_0\mathbb{E}_{00}E^K(c,d)\rangle \tag{6.20}$$

for every a, b, c, $d \in \mathbb{R}$.

Proof. Let us denote by $E^U(\eta_i) := (\eta_1 + x_2\eta_3)t \odot t + 2\eta_2 t \odot e_3$ so that $E^\perp = E^U(\eta_i) + E^K(a,b)$. By (6.8) we may rewrite the minimization problem (6.2) as

$$\langle f(x, \mathbb{E}_0(E^U(\eta_i^{\rm opt}) + E^K(a,b)))\rangle = \inf_{\eta_i \in \mathbb{R}} \langle f(x, \mathbb{E}_0(E^U(\eta_i) + E^K(a,b)))\rangle$$

whose minimality condition is

$$\langle \mathbb{C}\mathbb{E}_0(E^U(\eta_i^{\rm opt}) + E^K(a,b)) \cdot \mathbb{E}_0 E^U(\xi_i)\rangle = 0 \quad \forall \xi_i \in \mathbb{R}.$$

Thus, since f is convex and $\mathbb{E}_0$ is a linear operator, we have that

$$\eta_i = \eta_i^{\rm opt} \iff \langle \mathbb{C}\mathbb{E}_0(E^U(\eta_i) + E^K(a,b)) \cdot \mathbb{E}_0 E^U(\xi_i)\rangle = 0 \quad \forall \xi_i \in \mathbb{R},$$

which, by (6.13), is equivalent to

$$\eta_i = \eta_i^{\mathrm{opt}} \iff \langle \mathbb{C}\mathbb{E}_0(E^U(\eta_i) + E^K(a,b)) \cdot E^U(\xi_i)\rangle = 0 \quad \forall \xi_i \in \mathbb{R},$$

and this, in turn, is equivalent to (6.19).

To prove (6.20) note that

$$\begin{aligned}\langle \mathbb{C}\mathbb{E}_0\mathbb{E}_{00}E^K(a,b) \cdot E^K(c,d)\rangle &= \langle \mathbb{C}\mathbb{E}_0\mathbb{E}_{00}E^K(a,b) \cdot \mathbb{E}_{00}E^K(c,d)\rangle \\ &= \langle \mathbb{C}\mathbb{E}_0\mathbb{E}_{00}E^K(a,b) \cdot \mathbb{E}_0\mathbb{E}_{00}E^K(c,d)\rangle,\end{aligned}$$

where the first equality follows from (6.19) and the last from (6.13). ∎

Remark 6.3. By taking $a = c$ and $b = d$ in (6.20) and using that $\mathbb{C}$ is positive definite, we deduce that there exists a constant $C \geq 0$ such that

$$|\mathbb{E}_0\mathbb{E}_{00}E^K(a,b)| \leq C|E^K(a,b)|$$

for every a, $b \in \mathbb{R}$.

6.2. Computation of the reduced energy densities. In this subsection we outline the computation of the energy densities. Let

$$E_{11} := t \cdot Et, \quad E_{13} := t \cdot Ee_3, \quad E_{33} := e_3 \cdot Ee_3.$$

From (6.8) we find

$$\begin{aligned}f_0(x, E_{11}, E_{13}, E_{33}) = f(x, \mathbb{E}_0E^\perp) &= \frac{1}{2}\mathbb{C}\mathbb{E}_0E^\perp \cdot \mathbb{E}_0E^\perp \\ &= \frac{1}{2}\mathbb{C}\mathbb{E}_0(E_{11}\, t \odot t + 2E_{13}\, t \odot e_3 + E_{33}\, e_3 \odot e_3) \\ &\quad \cdot \mathbb{E}_0(E_{11}\, t \odot t + 2E_{13}\, t \odot e_3 + E_{33}\, e_3 \odot e_3) \\ &= \frac{1}{2}\begin{pmatrix} \mathfrak{c}_{11}(x) & \mathfrak{c}_{12}(x) & \mathfrak{c}_{13}(x) \\ \mathfrak{c}_{12}(x) & \mathfrak{c}_{22}(x) & \mathfrak{c}_{23}(x) \\ \mathfrak{c}_{13}(x) & \mathfrak{c}_{23}(x) & \mathfrak{c}_{33}(x)\end{pmatrix}\begin{pmatrix} E_{11} \\ E_{13} \\ E_{33}\end{pmatrix} \cdot \begin{pmatrix} E_{11} \\ E_{13} \\ E_{33}\end{pmatrix},\end{aligned}$$

where $\mathfrak{c}_{ij}$ are given by

$$\begin{aligned}&\mathfrak{c}_{11} = \mathbb{C}\mathbb{E}_0(t \odot t) \cdot \mathbb{E}_0(t \odot t), && \mathfrak{c}_{22} = 4\mathbb{C}\mathbb{E}_0(t \odot e_3) \cdot \mathbb{E}_0(t \odot e_3), \\ &\mathfrak{c}_{12} = 4\mathbb{C}\mathbb{E}_0(t \odot t) \cdot \mathbb{E}_0(t \odot e_3), && \mathfrak{c}_{23} = 4\mathbb{C}\mathbb{E}_0(t \odot e_3) \cdot \mathbb{E}_0(e_3 \odot e_3), \\ &\mathfrak{c}_{13} = 2\mathbb{C}\mathbb{E}_0(t \odot t) \cdot \mathbb{E}_0(e_3 \odot e_3), && \mathfrak{c}_{33} = \mathbb{C}\mathbb{E}_0(e_3 \odot e_3) \cdot \mathbb{E}_0(e_3 \odot e_3).\end{aligned} \tag{6.21}$$

The η_i^{opt} may be computed by solving the system

$$\begin{pmatrix} \langle \mathfrak{c}_{11}\rangle & \langle \mathfrak{c}_{12}\rangle & \langle x_2\mathfrak{c}_{11}\rangle \\ \langle \mathfrak{c}_{12}\rangle & \langle \mathfrak{c}_{22}\rangle & \langle x_2\mathfrak{c}_{12}\rangle \\ \langle x_2\mathfrak{c}_{11}\rangle & \langle x_2\mathfrak{c}_{12}\rangle & \langle x_2^2\mathfrak{c}_{11}\rangle \end{pmatrix}\begin{pmatrix} \eta_1^{\mathrm{opt}} \\ \eta_2^{\mathrm{opt}} \\ \eta_3^{\mathrm{opt}}\end{pmatrix} = \begin{pmatrix} \langle x_2\mathfrak{c}_{12}\rangle a - \langle \mathfrak{c}_{13}\rangle b \\ \langle x_2\mathfrak{c}_{22}\rangle a - \langle \mathfrak{c}_{23}\rangle b \\ \langle x_2^2\mathfrak{c}_{12}\rangle a - \langle x_2\mathfrak{c}_{13}\rangle b\end{pmatrix}, \tag{6.22}$$

since (6.22) is equivalent to (6.19). Indeed, let $E^\perp$ be as in (6.18) with $\eta_i = \eta_i^{\mathrm{opt}}$; then by means of (6.13) and (6.21) we have

$$\begin{aligned}0 &= \langle \mathbb{C}\mathbb{E}_0E^\perp\rangle \cdot t \odot t = \langle \mathbb{C}\mathbb{E}_0E^\perp \cdot t \odot t\rangle = \langle \mathbb{C}\mathbb{E}_0E^\perp \cdot \mathbb{E}_0(t \odot t)\rangle \\ &= \langle \mathfrak{c}_{11}\rangle\eta_1^{\mathrm{opt}} + \langle x_2\mathfrak{c}_{11}\rangle\eta_3^{\mathrm{opt}} + \langle \mathfrak{c}_{12}\rangle\eta_2^{\mathrm{opt}} - \langle x_2\mathfrak{c}_{12}\rangle a + \langle \mathfrak{c}_{13}\rangle b,\end{aligned}$$

and hence the first equation of (6.22) is equivalent to the first equation of (6.19). The equivalence of the other equations is proved similarly.

We note that (6.22), and hence (6.19), has a unique solution since

$$\begin{aligned}
&\begin{pmatrix} \langle \mathfrak{C}_{11}\rangle & \langle \mathfrak{C}_{12}\rangle & \langle x_2\mathfrak{C}_{11}\rangle \\ \langle \mathfrak{C}_{12}\rangle & \langle \mathfrak{C}_{22}\rangle & \langle x_2\mathfrak{C}_{12}\rangle \\ \langle x_2\mathfrak{C}_{11}\rangle & \langle x_2\mathfrak{C}_{12}\rangle & \langle x_2^2\mathfrak{C}_{11}\rangle \end{pmatrix} \begin{pmatrix} a_1 \\ a_2 \\ a_3 \end{pmatrix} \cdot \begin{pmatrix} a_1 \\ a_2 \\ a_3 \end{pmatrix} \\
&= \fint_{-h/2}^{h/2} \begin{pmatrix} \mathfrak{C}_{11} & \mathfrak{C}_{12} \\ \mathfrak{C}_{12} & \mathfrak{C}_{22} \end{pmatrix} \begin{pmatrix} a_1 + x_2 a_3 \\ a_2 \end{pmatrix} \cdot \begin{pmatrix} a_1 + x_2 a_3 \\ a_2 \end{pmatrix} dx_2 \\
&\geq c \fint_{-h/2}^{h/2} \left| \begin{pmatrix} a_1 + x_2 a_3 \\ a_2 \end{pmatrix} \right|^2 dx_2 \geq c\,(a_1^2 + a_2^2 + a_3^2)
\end{aligned}$$

for every a_1, a_2, $a_3 \in \mathbb{R}$. The first inequality above is a consequence of (6.4).

Remark 6.4. From (6.22) we also deduce that the maps η_i^{opt} are measurable. Indeed, from the measurability of $\mathbb{C}$ and the Lipschitz continuity of the projection $\mathbb{P}$ we deduce the measurability of $\mathbb{E}_0$ thanks to (6.1). Then, from (6.21) it follows immediately that the coefficients $\mathfrak{c}_{ij}$ are measurable.

7. Γ-limit for beams with an open cross section. Let $J_\varepsilon : H^1(\Omega;\mathbb{R}^3) \to \mathbb{R} \cup \{+\infty\}$ be defined by

$$J_\varepsilon(u) = \begin{cases} \frac{1}{2}\int_\Omega \mathbb{C}E^\varepsilon u \cdot E^\varepsilon u \sqrt{g^\varepsilon}\, dx & \text{if } u \in H^1_{dn}(\Omega;\mathbb{R}^3), \\ +\infty & \text{if } u \in H^1(\Omega;\mathbb{R}^3)\backslash H^1_{dn}(\Omega;\mathbb{R}^3). \end{cases} \tag{7.1}$$

In this section we shall prove the Γ-convergence of the functional $J_\varepsilon/\delta_\varepsilon^2$ under an appropriate topology. In order to define the Γ-limit we set

$$\begin{aligned}
\mathcal{A}_{\mathfrak{s}} := \{(v,\vartheta) \in H^1(\Omega;\mathbb{R}^3) \times H^{1+\mathfrak{s}}_{dn}(0,L) : \exists\, \bar m \in H^2_{dn}(0,L;\mathbb{R}^3),\ \exists\, m_3 \in H^1_{dn}(0,L) \\
\text{such that } v = \bar v + v_3 e_3,\ \text{where } \bar v = \bar m + \mathfrak{s}\vartheta e_3 \wedge (\gamma - \gamma_G), \\
\text{and } v_3 = m_3 - \partial_3 \bar m \cdot (\gamma - \gamma_G) + \mathfrak{s}\partial_3\vartheta \textstyle\int_0^{x_1} (\gamma - \gamma_G)\cdot n\, ds\}.
\end{aligned}$$

The Γ-limit will be the functional $J_0 : H^1(\Omega;\mathbb{R}^3) \times H^1(0,L) \to \mathbb{R} \cup \{+\infty\}$ defined by

$$J_0(v,\vartheta) = \begin{cases} \int_\Omega f_{00}(x, \partial_3\vartheta, \partial_3 v_3)\, dx & \text{if } (v,\vartheta) \in \mathcal{A}_{\mathfrak{s}}, \\ +\infty & \text{otherwise.} \end{cases}$$

We split the Γ-convergence analysis into two parts. In the next theorem we study the liminf inequality.

THEOREM 7.1 (liminf inequality). *For every sequence* $\{u_\varepsilon\} \subseteq H^1(\Omega;\mathbb{R}^3)$ *and every* $(v,\vartheta) \in H^1(\Omega;\mathbb{R}^3) \times H^1(0,L)$ *such that*

$$\bar v^\varepsilon + v_3^\varepsilon e_3 \rightharpoonup v \ \textit{in}\ H^1(\Omega;\mathbb{R}^3)$$

and

$$g_2^\varepsilon \cdot H^\varepsilon u^\varepsilon g_1^\varepsilon \rightharpoonup \vartheta \ \textit{in}\ H^1(\Omega),$$

where

$$\bar{v}^\varepsilon = \frac{u^\varepsilon - u_3^\varepsilon e_3}{\delta_\varepsilon/\varepsilon}, \qquad v_3^\varepsilon = \frac{u_3^\varepsilon}{\delta_\varepsilon}, \qquad g_2^\varepsilon \cdot H^\varepsilon u^\varepsilon g_1^\varepsilon = \frac{1}{\varepsilon} g_2^\varepsilon \cdot \partial_1 u^\varepsilon,$$

we have

$$\liminf_{\varepsilon\to 0} \frac{J_\varepsilon(u^\varepsilon)}{\delta_\varepsilon^2} \geq J_0(v,\vartheta).$$

Proof. Without loss of generality we may assume that

$$\liminf_{\varepsilon\to 0} \frac{J_\varepsilon(u^\varepsilon)}{\delta_\varepsilon^2} = \lim_{\varepsilon\to 0} \frac{J_\varepsilon(u^\varepsilon)}{\delta_\varepsilon^2} < +\infty,$$

since otherwise the claim is trivially satisfied. By (2.5), it follows that the sequence $\{u^\varepsilon\}$ satisfies (5.1) and hence all the theorems contained in section 5 hold. In particular, by Theorems 5.8 and 5.9 we have that $(v,\vartheta) \in \mathcal{A}_{\mathfrak{s}}$. From (5.27), the convexity of f, and (6.1) we find

$$\begin{aligned}
\liminf_{\varepsilon\to 0} \frac{J_\varepsilon(u^\varepsilon)}{\delta_\varepsilon^2} &= \liminf_{\varepsilon\to 0} \int_\Omega f\left(x, \frac{E^\varepsilon u^\varepsilon}{\delta_\varepsilon}\right)\sqrt{g^\varepsilon}\,dx \geq \int_\Omega f(x,E)\,dx \\
&\geq \int_\Omega f_0(x, E_{11}, E_{13}, E_{33})\,dx \\
&= \int_\Omega f_0(x, \eta_1 + x_2\eta_3, -x_2\partial_3\vartheta + \eta_2, \partial_3 v_3)\,dx,
\end{aligned}$$

where the last equality has been obtained by means of Lemmas 5.10, 5.11, and 5.12. Here η_i do not depend on x_2 and have the regularity prescribed in the lemmas just quoted. Thus from (6.2) and (6.3) we deduce that

$$\begin{aligned}
\liminf_{\varepsilon\to 0} \frac{J_\varepsilon(u^\varepsilon)}{\delta_\varepsilon^2} \geq \int_0^L \int_0^\ell \inf_{\eta_i(x_1,x_3)} \int_{-h/2}^{h/2} & f_0(x, \eta_1(x_1,x_3) + x_2\eta_3(x_1,x_3) \\
& - x_2\partial_3\vartheta + \eta_2(x_1,x_3), \partial_3 v_3)\,dx_2 dx_1 dx_3 \\
= \int_\Omega f_{00}(x, \partial_3\vartheta, \partial_3 v_3)\,dx &= J_0(v,\vartheta),
\end{aligned}$$

and hence the theorem is proved. ∎

We now prove the existence of a recovery sequence.

THEOREM 7.2 (recovery sequence). *For every* $(v,\vartheta) \in H^1(\Omega;\mathbb{R}^3) \times H^1(0,L)$ *there exists a sequence* $\{u_\varepsilon\} \subseteq H^1(\Omega;\mathbb{R}^3)$ *such that*

$$\begin{aligned}
\bar{v}^\varepsilon + v_3^\varepsilon e_3 &\rightharpoonup v \text{ in } H^1(\Omega;\mathbb{R}^3), \\
g_2^\varepsilon \cdot H^\varepsilon u^\varepsilon g_1^\varepsilon &\rightharpoonup \vartheta \text{ in } H^1(\Omega),
\end{aligned}$$

where

$$\bar{v}^\varepsilon = \frac{u^\varepsilon - u_3^\varepsilon e_3}{\delta_\varepsilon/\varepsilon}, \qquad v_3^\varepsilon = \frac{u_3^\varepsilon}{\delta_\varepsilon}, \qquad g_2^\varepsilon \cdot H^\varepsilon u^\varepsilon g_1^\varepsilon = \frac{1}{\varepsilon} g_2^\varepsilon \cdot \partial_1 u^\varepsilon,$$

and

$$\limsup_{\varepsilon\to 0} \frac{J_\varepsilon(u^\varepsilon)}{\delta_\varepsilon^2} \leq J_0(v,\vartheta).$$

Proof. Let $(v,\vartheta) \in H^1(\Omega;\mathbb{R}^3) \times H^1(0,L)$ be given. To avoid trivial cases we assume that $J_0(v,\vartheta) < +\infty$. Thence $(v,\vartheta) \in \mathcal{A}_{\mathfrak{s}}$. Let

$$E^K(\partial_3\vartheta, \partial_3 v_3) := -2x_2\partial_3\vartheta t \odot e_3 + \partial_3 v_3 e_3 \odot e_3 \tag{7.2}$$

and

$$E^{\mathrm{opt}} := \mathbb{E}_0\mathbb{E}_{00}E^K(\partial_3\vartheta, \partial_3 v_3). \tag{7.3}$$

At the end of section 6 we remarked that the maps η_i^{opt} are measurable. From (6.15) it follows that $\mathbb{E}_0$ and hence E^{opt} are measurable. Moreover, from Remark 6.3 it follows immediately that $E^{\mathrm{opt}} \in L^2(\Omega;\mathbb{R}^{3\times 3})$.

Define $\mathcal{R}_\varepsilon : H^1_{dn}(\Omega;\mathbb{R}^3) \to \mathbb{R}$ by

$$\mathcal{R}_\varepsilon(u) := \frac{1}{2}\int_\Omega \mathbb{C}\left(\frac{E^\varepsilon u}{\delta_\varepsilon} - E^{\mathrm{opt}}\right)\cdot\left(\frac{E^\varepsilon u}{\delta_\varepsilon} - E^{\mathrm{opt}}\right)dx.$$

It follows that for each ε the functional $\mathcal{R}_\varepsilon$ has a minimizer. Let u^ε be the minimizer, i.e.,

$$\mathcal{R}_\varepsilon(u^\varepsilon) = \inf_u \mathcal{R}_\varepsilon(u).$$

By (4.7), we trivially find that $\|E^\varepsilon u^\varepsilon\|_{L^2(\Omega)} \le C\delta_\varepsilon$, and hence from Corollary 5.4 and Theorem 5.8 we deduce that

$$\begin{aligned} \bar{v}^\varepsilon + v_3^\varepsilon e_3 &\rightharpoonup \check{\bar{v}} + \check{v}_3 e_3 =: \check{v} \text{ in } H^1(\Omega;\mathbb{R}^3),\\ g_2^\varepsilon \cdot H^\varepsilon u^\varepsilon g_1^\varepsilon &\rightharpoonup \check{\vartheta} \text{ in } H^1(\Omega). \end{aligned}$$

Moreover, we also have

$$\frac{E^\varepsilon u^\varepsilon}{\delta_\varepsilon} \rightharpoonup \check{E} \text{ in } L^2(\Omega;\mathbb{R}^{3\times 3}).$$

We split the proof into several claims.

Claim 1. *$\check{E} = \mathbb{E}_0\check{E}^\perp$, thus $f_0(x,\check{E}^\perp) = f(x,\check{E})$.*

Claim 2. *$\check{E}^\perp = \mathbb{E}_{00}\check{E}^K(\partial_3\check{\vartheta}, \partial_3\check{v}_3)$, thus $f_{00}(x,\partial_3\check{\vartheta},\partial_3\check{v}_3) = f_0(x,\check{E}^\perp)$.*

Claim 3. *$\check{\vartheta} = \vartheta$ and $\check{v} = v$.*

Assuming that the claims hold we easily conclude the proof. Indeed, from Claim 3 we deduce that

$$\begin{aligned} \bar{v}^\varepsilon + v_3^\varepsilon e_3 &\rightharpoonup v \text{ in } H^1(\Omega;\mathbb{R}^3),\\ g_2^\varepsilon \cdot H^\varepsilon u^\varepsilon g_1^\varepsilon &\rightharpoonup \vartheta \text{ in } H^1(\Omega), \end{aligned}$$

and from the three claims it follows that

$$\check{E} = \mathbb{E}_0\mathbb{E}_{00}E^K(\partial_3\vartheta, \partial_3 v_3) = E^{\mathrm{opt}},$$

where the last identity is a consequence of (7.3).

The minimizer u^ε of $\mathcal{R}_\varepsilon$ satisfies the following problem:

$$\int_\Omega \mathbb{C}\left(\frac{E^\varepsilon u^\varepsilon}{\delta_\varepsilon} - E^{\mathrm{opt}}\right)\cdot\frac{E^\varepsilon \psi}{\delta_\varepsilon}\,dx = 0 \text{ for every } \psi \in H^1_{dn}(\Omega;\mathbb{R}^3). \tag{7.4}$$

For later use we note that this problem is equivalent to

$$\int_\Omega \mathbb{C}\left(\frac{E^\varepsilon u^\varepsilon}{\delta_\varepsilon} - E^{\mathrm{opt}}\right)\cdot \frac{H^\varepsilon \psi}{\delta_\varepsilon}\,dx = 0 \text{ for every } \psi \in H^1_{dn}(\Omega;\mathbb{R}^3). \tag{7.5}$$

By taking $\psi = u^\varepsilon$ in (7.4) we find

$$\int_\Omega \mathbb{C}\frac{E^\varepsilon u^\varepsilon}{\delta_\varepsilon}\cdot\frac{E^\varepsilon u^\varepsilon}{\delta_\varepsilon}\,dx = \int_\Omega \mathbb{C}\frac{E^\varepsilon u^\varepsilon}{\delta_\varepsilon}\cdot E^{\mathrm{opt}}\,dx$$

and hence, by (6.17),

$$\begin{aligned}
\lim_\varepsilon \frac{J_\varepsilon(u^\varepsilon)}{\delta_\varepsilon^2} &= \lim_\varepsilon \frac{1}{2}\int_\Omega \mathbb{C}\frac{E^\varepsilon u^\varepsilon}{\delta_\varepsilon}\cdot\frac{E^\varepsilon u^\varepsilon}{\delta_\varepsilon}\sqrt{g^\varepsilon}\,dx = \lim_\varepsilon \frac{1}{2}\int_\Omega \mathbb{C}\frac{E^\varepsilon u^\varepsilon}{\delta_\varepsilon}\cdot\frac{E^\varepsilon u^\varepsilon}{\delta_\varepsilon}\,dx\\
&= \lim_\varepsilon \frac{1}{2}\int_\Omega \mathbb{C}\frac{E^\varepsilon u^\varepsilon}{\delta_\varepsilon}\cdot E^{\mathrm{opt}}\,dx = \frac{1}{2}\int_\Omega \mathbb{C}\check{E}\cdot E^{\mathrm{opt}}\,dx\\
&= \frac{1}{2}\int_\Omega \mathbb{C}\mathbb{E}_0\mathbb{E}_{00}E^K(\partial_3\vartheta,\partial_3 v_3)\cdot \mathbb{E}_0\mathbb{E}_{00}E^K(\partial_3\vartheta,\partial_3 v_3)\,dx\\
&= \int_\Omega f(x,\mathbb{E}_0\mathbb{E}_{00}E^K(\partial_3\vartheta,\partial_3 v_3))\,dx = \int_\Omega f_{00}(x,\partial_3\vartheta,\partial_3 v_3)\,dx,\\
&= J_0(v,\vartheta),
\end{aligned}$$

which is the thesis of the theorem. We now prove the claims.

Proof of Claim 1. With $\varphi_i \in C_0^\infty(\Omega)$, for $i = 1,2,3$, let

$$\psi = \delta_\varepsilon^2\left(\int_{-h/2}^{x_2}\varphi_1(x_1,\zeta,x_3)\,d\zeta\, t + \int_{-h/2}^{x_2}\varphi_2(x_1,\zeta,x_3)\,d\zeta\, n + \int_{-h/2}^{x_2}\varphi_3(x_1,\zeta,x_3)\,d\zeta\, e_3\right).$$

Then

$$\frac{H^\varepsilon\psi}{\delta_\varepsilon} \to \varphi_1 t\otimes n + \varphi_2 n\otimes n + \varphi_3 e_3\otimes n$$

uniformly. From (7.5) we deduce that

$$\int_\Omega \mathbb{C}(\check{E} - E^{\mathrm{opt}})\cdot(\varphi_1 t\otimes n + \varphi_2 n\otimes n + \varphi_3 e_3\otimes n)\,dx = 0,$$

which implies that

$$\mathbb{P}\mathbb{C}(\check{E} - E^{\mathrm{opt}}) = 0, \tag{7.6}$$

where $\mathbb{P}$ is defined in (6.10). Since, by (6.12), $\mathbb{P}\mathbb{C}E^{\mathrm{opt}} = \mathbb{P}\mathbb{C}\mathbb{E}_0\mathbb{E}_{00}E^K(\partial_3\vartheta,\partial_3 v_3) = 0$ it follows that

$$\mathbb{P}\mathbb{C}\check{E} = 0. \tag{7.7}$$

Hence, Claim 1 follows from (6.12).

Proof of Claim 2. Let

$$\psi = \delta_\varepsilon\varepsilon\left(\int_0^{x_1}\varphi_1(\zeta,x_3)t(\zeta)\,d\zeta + \int_0^{x_1}\varphi_2(\zeta,x_3)\,d\zeta\, e_3\right)$$

with $\varphi_i \in C_0^\infty((0,\ell)\times(0,L))$ for $i=1,2$. Then

$$\frac{H^\varepsilon\psi}{\delta_\varepsilon} \to \varphi_1 t\otimes t + \varphi_2 e_3\otimes t$$

uniformly. By passing to the limit in (7.5) we deduce that

$$\int_\Omega \mathbb{C}(\check{E}-E^{\mathrm{opt}})\cdot(\varphi_1 t\otimes t+\varphi_2 e_3\otimes t)\,dx = 0,$$

and hence

$$\begin{cases}\langle\mathbb{C}(\check{E}-E^{\mathrm{opt}})\rangle\cdot t\odot t = 0,\\ \langle\mathbb{C}(\check{E}-E^{\mathrm{opt}})\rangle\cdot t\odot e_3 = 0.\end{cases} \tag{7.8}$$

We now take

$$\psi = \delta_\varepsilon\varepsilon x_2\varphi t - \varepsilon^2\int_0^{x_1}\varphi n\,dx_1$$

with $\varphi\in C^\infty((0,\ell)\times(0,L))$ and $\varphi=0$ nearby $x_3=0$.

After some calculations we can check that

$$\frac{E^\varepsilon\psi}{\delta_\varepsilon} \to x_2\partial_1\varphi t\otimes t$$

uniformly. By passing to the limit in (7.4) we get

$$\int_\Omega \mathbb{C}(\check{E}-E^{\mathrm{opt}})\cdot x_2\partial_1\varphi t\otimes t\,dx = 0.$$

Let $\varphi := \int_0^{x_1}\phi(\zeta,x_3)\,d\zeta$ with $\phi\in C_0^\infty((0,\ell)\times(0,L))$. Then, the above equation implies that

$$\langle x_2\mathbb{C}(\check{E}-E^{\mathrm{opt}})\rangle\cdot t\odot t = 0. \tag{7.9}$$

Since $E^{\mathrm{opt}} = \mathbb{E}_0\mathbb{E}_{00}E^K(\partial_3\vartheta,\partial_3 v_3)$, and by Claim 1 we have that $\check{E}=\mathbb{E}_0\check{E}^\perp$, from (7.8), (7.9) we deduce that

$$\begin{cases}\langle\mathbb{C}\mathbb{E}_0\check{E}^\perp\rangle\cdot t\odot t = 0,\\ \langle\mathbb{C}\mathbb{E}_0\check{E}^\perp\rangle\cdot t\odot e_3 = 0,\\ \langle x_2\mathbb{C}\mathbb{E}_0\check{E}^\perp\rangle\cdot t\odot t = 0,\end{cases}$$

since the part involving E^{opt} in (7.8) and (7.9) disappears by applying Lemma 6.2. Thus, by Lemma 6.2, it follows that

$$\check{E}^\perp = \mathbb{E}_{00}E^K(\partial_3\check{\vartheta},\partial_3\check{v}_3).$$

Proof of Claim 3. Let $\bar{\zeta}\in H^2_{dn}(0,L;\mathbb{R}^2)$, $\zeta_3\in H^1_{dn}(0,L)$, and $\phi\in H^2_{dn}(0,L)$. Set

$$\bar{\psi} := \frac{\delta_\varepsilon}{\varepsilon}\bar{\zeta} + \varepsilon\phi e_3\wedge(\gamma-\gamma_G) - \delta_\varepsilon\phi x_2 t$$

and

$$\psi_3 := \delta_\varepsilon \zeta_3 - \delta_\varepsilon \partial_3 \bar{\zeta} \cdot \left(\gamma - \gamma_G + \frac{\delta_\varepsilon}{\varepsilon} x_2 n \right) + \varepsilon^2 \partial_3 \phi \int_0^{x_1} (\gamma - \gamma_G) \cdot n \, ds - \delta_\varepsilon \varepsilon \partial_3 \phi x_2 (\gamma - \gamma_G) \cdot t.$$

With $\psi := \bar{\psi} + \psi_3 e_3$ we have

$$\frac{E^\varepsilon \psi}{\delta_\varepsilon} = -2x_2 \partial_3 \phi \left(1 - \frac{\delta_\varepsilon}{2\varepsilon} \kappa x_2 \right) g_1^\varepsilon \odot e_3 + \frac{\partial_3 \psi_3}{\delta_\varepsilon} e_3 \odot e_3,$$

and hence

$$\frac{E^\varepsilon \psi}{\delta_\varepsilon} \to -2x_2 \partial_3 \phi t \odot e_3 + \left(\partial_3 \zeta_3 - \partial_3 \partial_3 \bar{\zeta} \cdot (\gamma - \gamma_G) + \mathfrak{s} \partial_3 \partial_3 \phi \int_0^{x_1} (\gamma - \gamma_G) \cdot n \, ds \right) e_3 \odot e_3,$$

uniformly. By passing to the limit in (7.4) we deduce that

$$\int_\Omega \mathbb{C}(\check{E} - E^{\mathrm{opt}}) \cdot (-2x_2 \partial_3 \phi t \otimes e_3 + \partial_3 w_3 e_3 \odot e_3) \, dx = 0, \tag{7.10}$$

where

$$w_3 := \zeta_3 - \partial_3 \bar{\zeta} \cdot (\gamma - \gamma_G) + \mathfrak{s} \partial_3 \phi \int_0^{x_1} (\gamma - \gamma_G) \cdot n \, ds.$$

Equality (7.10) holds for every w_3 as above and every $\phi \in H^2_{dn}(0, L)$. By density it also holds for every $\phi \in H^{1+\mathfrak{s}}_{dn}(0, L)$. In view of (7.3) and Claims 1 and 2, we have

$$\int_\Omega \mathbb{C}\mathbb{E}_0 \mathbb{E}_{00} E^K(\partial_3(\check{\vartheta} - \vartheta), \partial_3(\check{v}_3 - v_3)) \cdot E^K(\partial_3 \phi, \partial_3 w_3) \, dx = 0,$$

and by (6.20) it follows that also

$$\int_\Omega \mathbb{C}\mathbb{E}_0 \mathbb{E}_{00} E^K(\partial_3(\check{\vartheta} - \vartheta), \partial_3(\check{v}_3 - v_3)) \cdot \mathbb{E}_0 \mathbb{E}_{00} E^K(\partial_3 \phi, \partial_3 w_3) \, dx = 0.$$

By taking $\phi = \check{\vartheta} - \vartheta$ and $w_3 = \check{v}_3 - v_3$ and by using (6.17) we deduce

$$\int_\Omega f_{00}(x, \partial_3(\check{\vartheta} - \vartheta), \partial_3(\check{v}_3 - v_3)) \, dx = 0. \tag{7.11}$$

Thus (7.11) and (6.5) imply that

$$\partial_3(\check{\vartheta} - \vartheta) = 0, \quad \partial_3(\check{v}_3 - v_3) = 0.$$

Thus, using the boundary conditions, $\check{\vartheta} = \vartheta$ and $\check{v}_3 = v_3$. From these equalities we also deduce that $\check{\bar{v}} = \bar{v}$. ∎

Remark 7.3. The energy considered in (4.6) includes the work done by the loads, while the Γ-convergence analysis deals with the elastic energy only (see (7.1)). Let $\mathscr{L}_\varepsilon(u^\varepsilon)$ denote the work of the loads rescaled by $\varepsilon\delta_\varepsilon$, as in (4.6), and assume that

$(1/\delta_\varepsilon^2)\mathscr{L}_\varepsilon(u^\varepsilon)$ continuously converges to $\mathscr{L}_0$ with respect to the convergence used in Theorems 7.1 and 7.2. Then, the Γ-limit of $(1/\delta_\varepsilon^2)\mathscr{F}_\varepsilon := (1/\delta_\varepsilon^2)(J_\varepsilon - \mathscr{L}_\varepsilon)$ is $\mathscr{F}_0 := J_0 - \mathscr{L}_0$. For instance, the simplest case is

$$\mathscr{L}_\varepsilon(u^\varepsilon) = \int_\Omega b^\varepsilon \cdot u^\varepsilon \sqrt{g^\varepsilon}\, dx,$$

where

$$b_\alpha^\varepsilon = \delta_\varepsilon \varepsilon\, b_\alpha \quad \alpha = 1, 2, \quad \text{and} \quad b_3^\varepsilon = \delta_\varepsilon\, b_3$$

with $b_\alpha, b_3 \in L^2(\Omega)$. By taking (5.6) into account we get

$$\begin{aligned}\mathscr{L}_\varepsilon(u^\varepsilon) &= \delta_\varepsilon^2 \int_\Omega \left(\frac{\varepsilon}{\delta_\varepsilon}(b_1 u_1^\varepsilon + b_2 u_2^\varepsilon) + \frac{1}{\delta_\varepsilon} b_3 u_3^\varepsilon\right) \sqrt{g^\varepsilon}\, dx \\ &= \delta_\varepsilon^2 \int_\Omega (b_1 v_1^\varepsilon + b_2 v_2^\varepsilon + b_3 v_3^\varepsilon) \sqrt{g^\varepsilon}\, dx\end{aligned}$$

and

$$\mathscr{L}_0(v, \vartheta) = \int_\Omega b_1 v_1 + b_2 v_2 + b_3 v_3\, dx, \tag{7.12}$$

where we have used the notation of Theorems 7.1 and 7.2. In the case $\mathfrak{s} = 1$, the right-hand side of (7.12) could be written in terms of $\bar{m}$, m_3, ϑ, and their derivatives. In the case $\mathfrak{s} = 0$, the dependence on ϑ drops out unless a more general sequence of loads is considered.

8. Appendix. Proof of Theorems 5.1 and 5.2. The proofs given in this appendix freely use ideas introduced by Kohn and Vogelius [10], Anzellotti, Baldo, and Percivale [1], Friesecke, James, and Müller [9], and Freddi, Mora, and Paroni [4].

In order to prove Theorems 5.1 and 5.2 it is useful to extend our functions and their domain of definition. The proof will be carried on for the closed cross section, since the proof for open cross sections could be obtained by simplifying sligthly that given for closed cross section beams.

We consider the extension

$$\Omega^e := \big(0, 2\ell\big) \times \left(-\frac{h}{2}, \frac{h}{2}\right) \times \big(-L, L\big)$$

of the reference domain $\Omega = (0, \ell) \times (-\frac{h}{2}, \frac{h}{2}) \times (0, L)$. The extension in the variable x_3 will simplify the analysis of the boundary condition at $x_3 = 0$, while that in the first variable will be used to take into account the periodicity of displacements. We note, incidentally, that in the case of an open cross section it would be enough to extend the domain in the x_3 variable only.

Hereafter, we will consider, without mentioning it, the extension of some functions defined on Ω to the domain Ω^e.

First, we extend the base curve γ to the interval $(0, 2\ell)$ by setting $\gamma(x_1 + \ell) = \gamma(x_1)$. We also extend u^ε by translation in the variable x_1, while we set it equal to zero when $x_3 \in (-L, 0)$. By the boundary conditions at $x_3 = 0$ then we have

$$u^\varepsilon \in H^1(\Omega^e; \mathbb{R}^3).$$

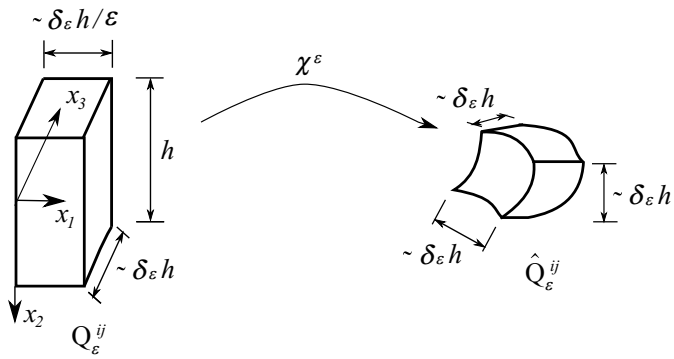

FIG. 3. *The domains* Q_ε^{ij} *and* $\widehat{Q}_\varepsilon^{ij}$.

We wish to split the domain Ω^e into small cube-like subdomains whose edges have length approximately equal to $\delta_\varepsilon h$. To this aim, let the natural numbers

$$n_3^\varepsilon := \left[\frac{L}{\delta_\varepsilon h}\right], \qquad n_1^\varepsilon := \left[\frac{\varepsilon \ell}{\delta_\varepsilon h}\right]$$

be defined as the integer part of $L/(\delta_\varepsilon h)$ and $\varepsilon\ell/(\delta_\varepsilon h)$, respectively, and subdivide Ω^e into the $2n_1^\varepsilon \times 2n_3^\varepsilon$ rectangular boxes

$$Q_\varepsilon^{ij} := \left(\frac{i\ell}{n_1^\varepsilon}, \frac{(i+1)\ell}{n_1^\varepsilon}\right) \times \left(-\frac{h}{2}, \frac{h}{2}\right) \times \left(\frac{jL}{n_3^\varepsilon}, \frac{(j+1)L}{n_3^\varepsilon}\right)$$

with $i = 0, \ldots, 2n_1^\varepsilon - 1$ and $j = -n_3^\varepsilon, \ldots, 0, \ldots, n_3^\varepsilon - 1$. Then, the corresponding subdomains of $\widehat{\Omega}_\varepsilon^e$ are given by

$$\begin{aligned}\widehat{Q}_\varepsilon^{ij} := \Bigg\{ \hat{x} : \hat{x} = \varepsilon\gamma\left(\frac{i\ell}{n_1^\varepsilon} + y_1\right) + \delta_\varepsilon y_2 n\left(\frac{i\ell}{n_1^\varepsilon} + y_1\right) \\ + \left(\frac{jL}{n_3^\varepsilon} + y_3\right) e_3 \quad \text{with} \quad y \in C_\varepsilon := \left(0, \frac{\ell}{n_1^\varepsilon}\right) \times \left(-\frac{h}{2}, \frac{h}{2}\right) \times \left(0, \frac{L}{n_3^\varepsilon}\right)\Bigg\}.\end{aligned}$$

The lengths of the edges of Q_ε^{ij} are ℓ/n_1^ε, b, and L/n_3^ε and they approximately correspond to the lengths indicated in Figure 3, as is straightforward to check.

The following lemma states that there is a function that maps $\widehat{Q}_\varepsilon^{ij}$ onto a fixed cube and whose gradient is arbitrarily close to a rescaled rotation.

LEMMA 8.1. *Let* $C = (0,1) \times (-1/2, 1/2) \times (0,1)$. *For any pair of indices* $i \in \{0, \ldots, 2n_1^\varepsilon - 1\}$ *and* $j \in \{-n_3^\varepsilon, \ldots, 0, \ldots, n_3^\varepsilon - 1\}$ *there exists a diffeomorphism* $\hat{\psi}_\varepsilon^{ij}$ *and a rotation* R_0^{ij} *such that*

$$\hat{\psi}_\varepsilon^{ij} : \widehat{Q}_\varepsilon^{ij} \to C$$

and

$$|\delta_\varepsilon h\, R_0^{ij^T} \nabla\hat{\psi}_\varepsilon^{ij}(\hat{x}) - I| \le c_\varepsilon \quad \forall \hat{x} \in \widehat{Q}_\varepsilon^{ij} \text{ with } c_\varepsilon \to 0. \tag{8.1}$$

Proof. Write Q_ε^{ij} in the form

$$Q_\varepsilon^{ij} = \left\{ x : x = \left(i\,\frac{\ell}{n_1^\varepsilon}, 0, j\,\frac{L}{n_3^\varepsilon}\right) + y \text{ with } y \in C_\varepsilon \right\}$$

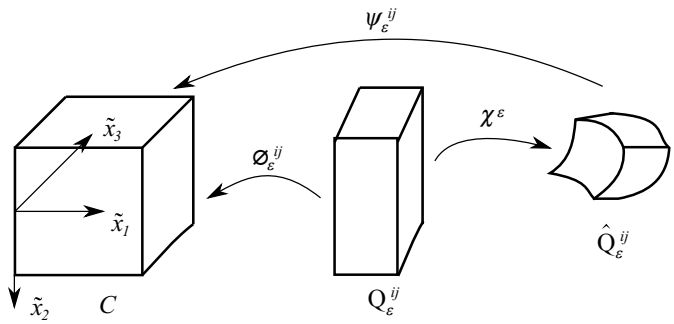

FIG. 4. *The domains C, Q_ε^{ij}, and $\widehat{Q}_\varepsilon^{ij}$.*

and define $\phi_\varepsilon^{ij} : Q_\varepsilon^{ij} \to C$ by

$$\phi_\varepsilon^{ij}(x) := \left(\frac{n_1^\varepsilon}{\ell}x_1 - i, \frac{1}{b}x_2, \frac{n_3^\varepsilon}{L}x_3 - j\right)$$

and $\hat{\psi}_\varepsilon^{ij} : \widehat{Q}_\varepsilon^{ij} \to C$ by

$$\hat{\psi}_\varepsilon^{ij} := \phi_\varepsilon^{ij} \circ (\chi^\varepsilon)^{-1},$$

where we recall that $\chi^\varepsilon(x) := \tilde{\chi}^\varepsilon \circ r^\varepsilon = \varepsilon\gamma(x_1) + \delta_\varepsilon x_2 n(x_1) + x_3 e_3$, see Figure 4. Then, from $\nabla\chi^\varepsilon = ((\varepsilon - \delta_\varepsilon\kappa x_2)t|\delta_\varepsilon n|e_3)$, we have

$$\begin{aligned}
\nabla\hat{\psi}_\varepsilon^{ij} &= \nabla\phi_\varepsilon^{ij} \circ (\chi^\varepsilon)^{-1}\, \nabla(\chi^\varepsilon)^{-1} \\
&= \operatorname{diag}\left(\frac{n_1^\varepsilon}{\ell}, \frac{1}{h}, \frac{n_3^\varepsilon}{L}\right)\left(\frac{1}{(\varepsilon - \delta_\varepsilon\kappa x_2)}t\left|\frac{1}{\delta_\varepsilon}n\right|e_3\right)^T \\
&= \left(\frac{n_1^\varepsilon}{\ell(\varepsilon - \delta_\varepsilon x_2\kappa)}t\left|\frac{1}{\delta_\varepsilon h}n\right|\frac{n_3^\varepsilon}{L}e_3\right)^T,
\end{aligned}$$

where the intrinsic basis $\{t, n, e_3\}$ is evaluated at $x_1 = i\ell/n_1^\varepsilon + y_1$.

By calling $R_0(x_1)$ the rotation that transforms the local basis $\{t(x_1), n(x_1), e_3\}$ into the Cartesian one $\{e_1, e_2, e_3\}$, that is, $R_0(x_1) := \big(t(x_1)|n(x_1)|e_3\big)^T$, we have therefore

$$\begin{aligned}
\left|\delta_\varepsilon h\nabla\hat{\psi}_\varepsilon^{ij} - R_0\right| &= \left|\left(\left[\frac{n_1^\varepsilon\delta_\varepsilon h}{\ell(\varepsilon - \delta_\varepsilon y_2\kappa)} - 1\right]t\middle|0\middle|\left[\frac{n_3^\varepsilon\delta_\varepsilon h}{L} - 1\right]e_3\right)\right| \\
&\le C\left(\left|\frac{n_1^\varepsilon\delta_\varepsilon h}{\ell(\varepsilon - \delta_\varepsilon y_2\kappa)} - 1\right| + \left|\frac{n_3^\varepsilon\delta_\varepsilon h}{L} - 1\right|\right) \\
&\le c_\varepsilon,
\end{aligned}$$

where c_ε are constants independent of the pair (i, j) and such that $\lim_{\varepsilon\to 0} c_\varepsilon = 0$.

Let now $R_0^{ij} := R_0\big(\frac{(i+\frac{1}{2})\ell}{n_1^\varepsilon}\big)$. Since $R_0 \in W^{1,\infty}(0, 2\ell; \mathbb{R}^{3\times 3})$ it follows that

$$|R_0(x_1) - R_0^{ij}| \le C\frac{\ell}{n_1^\varepsilon} \le C\frac{\delta_\varepsilon}{\varepsilon}$$

for every $x_1 \in \left(\frac{i\ell}{n_1^\varepsilon}, \frac{(i+1)\ell}{n_1^\varepsilon}\right)$. Therefore, recalling that $\frac{\delta_\varepsilon}{\varepsilon} \to 0$ as $\varepsilon \to 0$, we have

$$|\delta_\varepsilon h \nabla \hat{\psi}_\varepsilon^{ij} - R_0^{ij}| \le |\delta_\varepsilon h \nabla \hat{\psi}_\varepsilon^{ij} - R_0| + |R_0 - R_0^{ij}| \to 0$$

or, equivalently,

$$|\delta_\varepsilon h \nabla \hat{\psi}_\varepsilon^{ij} - R_0^{ij}| \le c_\varepsilon.$$

Inequality (8.1) follows by recalling that $|R_0^{ij} A| = |A|$, since R_0^{ij} is orthogonal. ∎

Proof of Theorems 5.1 *and* 5.2. Setting

$$\hat{\phi}_\varepsilon^{ij}(\hat{x}) := \delta_\varepsilon h \, {R_0^{ij}}^T \hat{\psi}_\varepsilon^{ij}(\hat{x})$$

we have that the diffeomorphism $\hat{\phi}_\varepsilon^{ij} : \widehat{Q}_\varepsilon^{ij} \to \delta_\varepsilon h \, {R_0^{ij}}^T C$ satisfies the inequality

$$|\nabla \hat{\phi}_\varepsilon^{ij} - I| \le c_\varepsilon,$$

where c_ε is the same constant as in Lemma 8.1. Since $\lim_{\varepsilon \to 0} c_\varepsilon = 0$, together with the fact that Korn's constant is invariant under rotations and homogeneous dilations of the domain, this implies that Korn's inequality holds true in the sets $\widehat{Q}_\varepsilon^{ij}$ with a constant that does not depend either on ε or on $\{i, j\}$. (See for a similar argument Pideri and Seppecher [11].) Hence, for every $\varepsilon > 0$ and every $i = 0, \dots, 2n_1^\varepsilon - 1$ and $j = -n_3^\varepsilon, \dots, n_3^\varepsilon - 1$ there exists a skew symmetric constant tensor W_ε^{ij} such that

$$\int_{\widehat{Q}_\varepsilon^{ij}} |\nabla \hat{u}^\varepsilon - W_\varepsilon^{ij}|^2 d\hat{x} \le C \int_{\widehat{Q}_\varepsilon^{ij}} |E\hat{u}^\varepsilon|^2 d\hat{x}.$$

Or also, after a change of variables,

$$\int_{Q_\varepsilon^{ij}} |H^\varepsilon u^\varepsilon - W_\varepsilon^{ij}|^2 \sqrt{g^\varepsilon}\, dx \le C \int_{Q_\varepsilon^{ij}} |E^\varepsilon u^\varepsilon|^2 \sqrt{g^\varepsilon}\, dx. \tag{8.2}$$

Set

$$\overline{W}^\varepsilon := \sum_{ij} W_\varepsilon^{ij} \chi_{Q_\varepsilon^{ij}}$$

with $\chi_{Q_\varepsilon^{ij}}$ the characteristic function of Q_ε^{ij}. Then, from (8.2), we get

$$\int_{\Omega^e} |H^\varepsilon u^\varepsilon - \overline{W}^\varepsilon|^2 \sqrt{g^\varepsilon}\, dx \le C \int_{\Omega^e} |E^\varepsilon u^\varepsilon|^2 \sqrt{g^\varepsilon}\, dx. \tag{8.3}$$

We notice that $\overline{W}^\varepsilon$ could be identified with a function of (x_1, x_3) only. Hereafter we shall tacitly make this identification. Furthermore, the periodicity condition $\overline{W}^\varepsilon(x_1 + \ell, \cdot) = \overline{W}^\varepsilon(x_1, \cdot)$ for every $x_1 \in [0, \ell]$ holds true, and $\overline{W}^\varepsilon(x) = 0$ whenever $x_3 \in (-L, 0)$.

We need now to estimate the variation of $\overline{W}^\varepsilon$ from the parallelepiped Q_ε^{ij} to the next one in Ω^e. To this aim, for a same thin-walled beam occupying the physical domain $\widehat{\Omega}_\varepsilon$, we consider different subdivisions of the set Ω^e described below.

In place of the pair ij we use a multi-index

$$\alpha := (\alpha_1, 0, \alpha_3) = \left(\left(\frac{1}{2} + i\right)\frac{\ell}{n_1^\varepsilon}, 0, \left(\frac{1}{2} + j\right)\frac{L}{n_3^\varepsilon}\right). \tag{8.4}$$

With this notation we set

$$Q_\varepsilon(\alpha) = \left\{ \left(\alpha_1 + \frac{\ell}{n_1^\varepsilon} y_1, h\, y_2, \alpha_3 + \frac{L}{n_3^\varepsilon} y_3 \right) : y \in \left(-\frac{1}{2}, \frac{1}{2} \right)^3 \right\},$$

the parallelepiped centered in α and with side lengths ℓ/n_1^ε, h, and L/n_3^ε. Likewise, we denote by

$$Q_\varepsilon^{(3)}(\alpha) = \left\{ \left(\alpha_1 + \frac{3\ell}{n_1^\varepsilon} y_1, h\, y_2, \alpha_3 + \frac{3L}{n_3^\varepsilon} y_3 \right) : y \in \left(-\frac{1}{2}, \frac{1}{2} \right)^3 \right\}$$

the parallelepiped with the same center and side lengths $3\ell/n_1^\varepsilon$, h, and $3L/n_3^\varepsilon$. We will denote by $\overline{W}^\varepsilon(\alpha)$ and $\overline{W}^\varepsilon_{(3)}(\alpha)$ the rotations appearing in Korn's inequality (8.2) when Q_ε^{ij} is replaced by $Q_\varepsilon(\alpha)$ and $Q_\varepsilon^{(3)}(\alpha)$, respectively.

By Korn's inequality, for any ε small enough there exists a skew symmetric constant tensor $\overline{W}^\varepsilon_{(3)}(\alpha)$ such that

$$\int_{Q_\varepsilon^{(3)}(\alpha)} |\overline{W}^\varepsilon_{(3)}(\alpha) - H^\varepsilon u^\varepsilon|^2 \sqrt{g^\varepsilon}\, dx \le C \int_{Q_\varepsilon^{(3)}(\alpha)} |E^\varepsilon u^\varepsilon|^2 \sqrt{g^\varepsilon}\, dx, \tag{8.5}$$

which holds whenever $Q_\varepsilon^{(3)}(\alpha) \subseteq \Omega^e$.

Let now $\beta = \alpha + \lambda$ with α as in (8.4) for some i and j, and

$$\lambda = \big(\lambda_1, 0, \lambda_3\big) \in \left\{ \big(0,0,0\big), -\left(\frac{\ell}{n_1^\varepsilon}, 0, \frac{L}{n_3^\varepsilon} \right), \left(\frac{\ell}{n_1^\varepsilon}, 0, \frac{L}{n_3^\varepsilon} \right) \right\}.$$

Since $Q_\varepsilon(\beta) \subseteq Q_\varepsilon^{(3)}(\alpha)$, then

$$\begin{aligned} |Q_\varepsilon(\beta)|\, |\overline{W}^\varepsilon(\beta) - \overline{W}^\varepsilon_{(3)}(\alpha)|^2 \le{}& 2 \int_{Q_\varepsilon(\beta)} |\overline{W}^\varepsilon(\beta) - H^\varepsilon v^\varepsilon|^2 \sqrt{g^\varepsilon}\, dx \\ &+ 2 \int_{Q_\varepsilon^{(3)}(\alpha)} |\overline{W}^\varepsilon_{(3)}(\alpha) - H^\varepsilon v^\varepsilon|^2 \sqrt{g^\varepsilon}\, dx. \end{aligned}$$

Therefore, using (8.2) and (8.5), we have that

$$|Q_\varepsilon(\beta)|\, |\overline{W}^\varepsilon(\beta) - \overline{W}^\varepsilon_{(3)}(\alpha)|^2 \le C \int_{Q_\varepsilon^{(3)}(\alpha)} |E^\varepsilon v^\varepsilon|^2 \sqrt{g^\varepsilon}\, dx. \tag{8.6}$$

Since $|\overline{W}^\varepsilon(\alpha) - \overline{W}^\varepsilon(\beta)|^2 \le 2\big(|\overline{W}^\varepsilon(\alpha) - \overline{W}^\varepsilon_{(3)}(\alpha)|^2 + |\overline{W}^\varepsilon(\beta) - \overline{W}^\varepsilon_{(3)}(\alpha)|^2\big)$, by (8.6) and its special case $\alpha = \beta$ (that is, $\lambda = 0$)

$$|Q_\varepsilon(\beta)|\, |\overline{W}^\varepsilon(\alpha) - \overline{W}^\varepsilon(\beta)|^2 \le C \int_{Q_\varepsilon^{(3)}(\alpha)} |E^\varepsilon v^\varepsilon|^2 \sqrt{g^\varepsilon}\, dx, \tag{8.7}$$

which can also be written, being $\overline{W}^\varepsilon$ piecewise constant,

$$\int_{S_\varepsilon(\alpha)} |\overline{W}^\varepsilon(x' + \lambda') - \overline{W}^\varepsilon(x')|^2\, dx' \le \frac{C}{h} \int_{Q_\varepsilon^{(3)}(\alpha)} |E^\varepsilon v^\varepsilon|^2 \sqrt{g^\varepsilon}\, dx,$$

where $x' := (x_1, x_3)$, $\lambda' := (\lambda_1, \lambda_3)$, and

$$S_\varepsilon(\alpha) = \left\{ \left(\alpha_1 + \frac{\ell}{n_1^\varepsilon} y_1, \alpha_3 + \frac{L}{n_3^\varepsilon} y_3 \right) : (y_1, y_3) \in \left(-\frac{1}{2}, \frac{1}{2} \right)^2 \right\}.$$

Then, for $\eta' = (\eta_1, \eta_3) \in \mathbb{R}^2$ such that $|\eta'|_\infty := \max\{|\eta_1|, |\eta_3|\} \le \max(\ell/n_1^\varepsilon, L/n_3^\varepsilon)$, we get

$$\int_{S_\varepsilon(\alpha)} |\overline{W}^\varepsilon(x'+\eta') - \overline{W}^\varepsilon(x')|^2\, dx' \le \frac{C}{h} \int_{Q_\varepsilon^{(3)}(\alpha)} |E^\varepsilon v^\varepsilon|^2 \sqrt{g^\varepsilon}\, dx.$$

Let now V' be an open set compactly contained in $V = (0, 2\ell) \times (-L, L)$ and consider a more general translation vector $\eta' \in \mathbb{R}^2$ such that $|\eta'|_\infty < \operatorname{dist}(V', \partial V)$. Let

$$N := \max\left\{ \left[\frac{|\eta_1|}{\ell/n_1^\varepsilon}\right], \left[\frac{|\eta_3|}{L/n_3^\varepsilon}\right] \right\}$$

and pick $\eta_0', \dots, \eta_{N+1}'$ such that $\eta_0' = (0,0)$, $\eta_{N+1}' = \eta'$, $|\eta_{k+1}' - \eta_k'|_\infty \le \max(\ell/n_1^\varepsilon, L/n_3^\varepsilon)$. Then,

$$|\overline{W}^\varepsilon(x'+\eta') - \overline{W}^\varepsilon(x')|^2 \le (N+1) \sum_{k=0}^{N} |\overline{W}^\varepsilon(x'+\eta_{k+1}') - \overline{W}^\varepsilon(x'+\eta_k')|^2$$

and therefore

$$\int_{S_\varepsilon(\alpha)} |\overline{W}^\varepsilon(x'+\eta') - \overline{W}^\varepsilon(x')|^2 dx' \le \frac{C(N+1)}{h} \sum_{k=0}^{N} \int_{Q_\varepsilon^{(3)}(\alpha+\eta_k)} |E^\varepsilon v^\varepsilon|^2 \sqrt{g^\varepsilon}\, dx$$

with $\eta_k := (\eta_{k1}, 0, \eta_{k3})$. Summing over all $S_\varepsilon(\alpha) \cap V' \neq \varnothing$ and using the fact that each $z \in \Omega^e$ is contained in at most $N+1$ of the sets $Q_\varepsilon^{(3)}(\alpha+\eta_k)$ we deduce that

$$\int_{V'} |\overline{W}^\varepsilon(x'+\eta') - \overline{W}^\varepsilon(x')|^2 dx' \le C \left(\frac{\varepsilon|\eta_1|}{\delta_\varepsilon} \vee \frac{|\eta_3|}{\delta_\varepsilon} + 1 \right)^2 \int_{\Omega^e} |E^\varepsilon v^\varepsilon|^2 \sqrt{g^\varepsilon}\, dx.$$

By using assumption (5.1) it follows that

$$\int_{V'} |\overline{W}^\varepsilon(x'+\eta') - \overline{W}^\varepsilon(x')|^2 dx' \le C\big(\varepsilon|\eta_1| \vee |\eta_3| + \delta_\varepsilon\big)^2 \tag{8.8}$$

for any $\eta' = (\eta_1, \eta_3)$ such that $|\eta'|_\infty < \operatorname{dist}(V', \partial V)$.

Let us extend $\overline{W}^\varepsilon$ to the whole of $\mathbb{R}^2$ by successive reflections. Let η_ε be any sequence of mollifiers which will be made precise in the following and define

$$W^\varepsilon(y') := \overline{W}^\varepsilon * \eta_\varepsilon(y') = \int \eta_\varepsilon(z') \overline{W}^\varepsilon(y'-z')\, dz'.$$

Using the fact that $\int \eta_\varepsilon = 1$ and Hölder's inequality, we observe that

$$\begin{aligned} \|W^\varepsilon - \overline{W}^\varepsilon\|_{L^2(V')}^2 &= \int_{V'} \left| \int \eta_\varepsilon(z') \big(\overline{W}^\varepsilon(y'-z') - \overline{W}^\varepsilon(y')\big)\, dz' \right|^2 dy' \\ &\le \int |\eta_\varepsilon(z')|^2 dz' \int_{\operatorname{supp}\eta_\varepsilon} \int_{V'} |\overline{W}^\varepsilon(y'-z') - \overline{W}^\varepsilon(y')|^2\, dy'\, dz'. \end{aligned} \tag{8.9}$$

Let us now choose the sequence of mollifiers as follows. For $i = 1, 3$, let $\eta_i \in C_c^\infty(-1/2, 1/2)$, $\eta_i \ge 0$, $\int \eta_i = 1$, and define

$$\eta_\varepsilon(z') := \frac{\varepsilon}{\delta_\varepsilon^2} \eta_1\left(\frac{\varepsilon z_1}{\delta_\varepsilon}\right) \eta_3\left(\frac{z_3}{\delta_\varepsilon}\right).$$

Then $\eta_\varepsilon \in C_c^\infty((-\delta_\varepsilon/2\varepsilon, \delta_\varepsilon/2\varepsilon) \times (-\delta_\varepsilon/2, \delta_\varepsilon/2))$ and $\int \eta_\varepsilon = 1$. In particular, for any ε small enough, $\operatorname{supp} \eta_\varepsilon$ is contained into a ball with radius smaller than the distance from V' to ∂V. Therefore we can apply estimate (8.8) in (8.9) and substitute the expression of η_ε, so obtaining

$$\begin{aligned}\|W^\varepsilon - \overline{W}^\varepsilon\|^2_{L^2(V')} &\le C \int |\eta_\varepsilon(z')|^2 dz' \int_{\operatorname{supp}\eta_\varepsilon} \big((\varepsilon|z_1| \vee |z_3|) + \delta_\varepsilon\big)^2 \, dz_1 dz_3 \\ &\le C \int \left|\frac{\varepsilon}{\delta_\varepsilon^2}\eta(x')\right|^2 \frac{\delta_\varepsilon^2}{\varepsilon} dx' \int_{\operatorname{supp}\eta_\varepsilon} \delta_\varepsilon^2 \, dz' \le C\delta_\varepsilon^2,\end{aligned}$$

which implies that

$$\|W^\varepsilon - \overline{W}^\varepsilon\|_{L^2(V)} \le C\delta_\varepsilon, \tag{8.10}$$

since the constant C does not depend on the choice of V'. From (8.3) and (8.10) it follows that

$$\|H^\varepsilon u^\varepsilon - W^\varepsilon\|^2_{L^2(V)} \le C\delta_\varepsilon^2.$$

Applying Hölder's inequality and proceeding as above, we have

$$\begin{aligned}\int_{V'} |\partial_3 W^\varepsilon|^2 dy' &= \int_{V'} \left| \int \partial_3 \eta_\varepsilon \big(\overline{W}^\varepsilon(y'-z') - \overline{W}^\varepsilon(y')\big) \, dz' \right|^2 dy' \\ &\le \int_{\operatorname{supp}\eta_\varepsilon} |\partial_3 \eta_\varepsilon|^2 dz' \int_{V'} \int_{\operatorname{supp}\eta_\varepsilon} |\overline{W}^\varepsilon(y'-z') - \overline{W}^\varepsilon(y')|^2 \, dz' dy' \\ &\le C\frac{\varepsilon}{\delta_\varepsilon^4} \int_{\operatorname{supp}\eta_\varepsilon} \big((\varepsilon|z_1| \vee |z_3|) + \delta_\varepsilon\big)^2 \, dz' \le C,\end{aligned}$$

which implies

$$\|\partial_3 W^\varepsilon\|_{L^2(V)} \le C. \tag{8.11}$$

Analogously, it can be proved that

$$\|\partial_1 W^\varepsilon\|_{L^2(V)} \le C\varepsilon. \tag{8.12}$$

By the Poincaré inequality and (8.11) we have

$$\|W^\varepsilon\|_{L^2(V)} \le C\|\partial_3 W^\varepsilon\|_{L^2(V)} \le C. \tag{8.13}$$

Thus, the sequence $\{W^\varepsilon\}$ is bounded in $H^1(V;\mathbb{R}^3)$ and thence there exists $W \in H^1(V;\mathbb{R}^3)$ such that

$$W^\varepsilon \rightharpoonup W \qquad \text{in } H^1(V;\mathbb{R}^3). \tag{8.14}$$

Therefore the theorems are proved by taking the restrictions to Ω (of the trivial extensions to Ω^e) of W^ε and W. In particular,

- (i) of Theorem 5.1 follows from (8.3), (8.10), and (5.1);
- (ii) of Theorem 5.1 follows from (8.13) and (8.11);
- (iii) of Theorem 5.1 follows from (8.12);
- $W \in H^1_{dn}(0, L; \mathbb{R}^{3\times 3}_{\mathrm{skw}})$. In particular, it depends only on the variable x_3 as a consequence of (iii) and of the fact that W^ε is independent of x_2. The boundary condition follows instead from the convergence (8.14), since $W^\varepsilon(x)$ is zero for $x_3 \in (-L, -\delta_\varepsilon/2)$ and $\lim_{\varepsilon\to 0} \delta_\varepsilon = 0$.

This proves Theorem 5.1.

Theorem 5.2 follows by noticing that $u^\varepsilon \in H^1_{\#dn}(\Omega; \mathbb{R}^3)$ implies that $W^\varepsilon(x_1 + \ell, \cdot) = W^\varepsilon(x_1, \cdot)$ for every $x_1 \in [0, \ell]$. In particular, we have that $W^\varepsilon(0, \cdot) = W^\varepsilon(\ell, \cdot)$ for every ε. $\square$

Acknowledgment. The authors thank the anonymous referee, who pointed out a few issues that needed more careful attention in the first version of the present manuscript.

REFERENCES

[1] G. Anzellotti, S. Baldo, and D. Percivale, *Dimension reduction in variational problems, asymptotic development in* Γ*-convergence and thin structures in elasticity*, Asymptot. Anal., 9 (1994), pp. 61–100.

[2] G. Dal Maso, *An Introduction to* Γ*-Convergence*, Progr. Nonlinear Differential Equations Appl., 8, Birkhäuser Boston, Boston, MA, 1993.

[3] E. Davoli, *Thin-walled beams with a cross-section of arbitrary geometry: derivation of linear theories starting from* $3D$ *nonlinear elasticity*, Adv. Calc. Var., 6 (2013), pp. 33–91.

[4] L. Freddi, M. G. Mora, and R. Paroni, *Nonlinear thin-walled beams with a rectangular cross-section—Part* I, Math. Models Methods Appl. Sci., 22 (2012), 1150016.

[5] L. Freddi, M. G. Mora, and R. Paroni, *Nonlinear thin-walled beams with a rectangular cross-section—Part* II, Math. Models Methods Appl. Sci., 23 (2013), pp. 743–775.

[6] L. Freddi, A. Morassi, and R. Paroni, *Thin-walled beams: the case of the rectangular cross-section*, J. Elasticity, 76 (2005), pp. 45–66.

[7] L. Freddi, A. Morassi, and R. Paroni, *Thin-walled beams: A derivation of Vlassov theory via* Γ*-convergence*, J. Elasticity, 86 (2007), pp. 263–296.

[8] L. Freddi, F. Murat, and R. Paroni, *Anisotropic inhomogeneous rectangular thin-walled beams*, SIAM J. Math. Anal., 40 (2009), pp. 1923–1951.

[9] G. Friesecke, R. James, and S. Müller, *A theorem on geometric rigidity and the derivation of nonlinear plate theory from three-dimensional elasticity*, Comm. Pure Appl. Math., 55 (2002), pp. 1461–1506.

[10] R. V. Kohn and M. Vogelius, *A new model for thin plates with rapidly varying thickness.* II. *A convergence proof*, Quart. Appl. Math., 43 (1985), pp. 1–22.

[11] C. Pideri and P. Seppecher, *Asymptotics of a non-planar rod in non-linear elasticity*, Asymptot. Anal., 48 (2006), pp. 33–54.

[12] V. Volovoi, D. Hodges, C. Cesnik, and B. Popescu, *Assessment of beam modeling methods for rotor blade applications*, Math. Comput. Modelling, 33 (2001), pp. 1099–1112.