Università degli studi di Udine

Demand side management of a commercial refrigeration system with cold thermal energy storage

Original

Availability:
This version is available http://hdl.handle.net/11390/1162815 since 2020-04-13T11:18:22Z

Publisher:

Published
DOI:10.18462/iir.icr.2019.1088

Terms of use:
The institutional repository of the University of Udine (http://air.uniud.it) is provided by ARIC services. The aim is to enable open access to all the world.

Publisher copyright

(Article begins on next page)

12 October 2024

Manuscript ID: 1088
DOI: 10.18462/iir.icr.2019.1088

Demand side management of a commercial refrigeration system with cold thermal energy storage

Gianluca COCCIA[(a)], Alessia ARTECONI[(a)], Paola D'AGARO[(b)], Fabio POLONARA[(a,c)], Giovanni CORTELLA[(b)]

[(a)] Università Politecnica delle Marche, Dipartimento di Ingegneria Industriale e Scienze Matematiche Via Brecce Bianche 12, Ancona (AN), 60131, Italy, g.coccia@univpm.it, a.arteconi@univpm.it, f.polonara@univpm.it
[(b)] Università degli Studi di Udine, Dipartimento Politecnico di Ingegneria e Architettura Via delle Scienze 206, Udine (UD), 33100, Italy, paola.darago@uniud.it, giovanni.cortella@uniud.it
[(c)] Consiglio Nazionale delle Ricerche, Istituto per le Tecnologie della Costruzione Viale Lombardia 49, San Giuliano Milanese (MI), 20098, Italy

ABSTRACT

Accounting for about 17% of the overall electricity consumption worldwide, the refrigeration sector requires improvements in energy reduction and management. Demand side management (DSM) could be adopted to improve the overall system energy efficiency. In this work, a CO_2 commercial refrigeration system coupled with different cold thermal energy storages (CTES) is studied through a DSM approach. A fire prevention water tank of 950 m^3 and low-melting-point phase change materials are considered. Based on a demand response strategy, the CTES are used to change the timing of end-use consumption from high electricity cost periods to low-cost periods. During off-peak times, cold thermal energy can be generated by electricity, stored in the CTES and then used during peak-hours to flatten the utility load profile. Results show that a similar application can lead to economic savings if the system takes advantage of the different electricity prices during peak and off-peak hours.

Keywords: Demand side management, Demand response, Thermal energy storage, Real-time pricing, National electricity price.

1. INTRODUCTION

The refrigeration sector accounts for about 17% of the overall electrical energy use worldwide (IIR, 2015). In supermarkets, display cabinets and cold rooms for food storage require 45% of the overall electricity demand, while household refrigerators and freezers are responsible of almost 4% of residential electrical energy use. Air conditioners consume around 5% of the global electricity consumption and the impact of heat pumps is increasing (800,000 units sold in European Union only), thus making the refrigeration sector an appropriate candidate for energy reduction and management initiatives (Arteconi and Polonara, 2017).

Among the solutions available to improve the energy flexibility of refrigeration systems, demand side management (DSM) consists of a set of policies that can be adopted to influence and modify the customer's energy demand (Lund et al., 2015). In particular, a DSM strategy referred to as demand response (DR) allows to change the electricity use by end customers in response to variations of the electricity price over time (Aazami et al., 2011).

In the last years, carbon dioxide has received growing attention as refrigerant, thanks to its favorable thermophysical properties, non-toxicity, non-flammability and very low global warming potential (Cavallini and Zilio, 2007). On the other hand, its low critical temperature and high operating pressure levels could negatively affect a refrigeration system efficiency, when compared

with the adoption of traditional HFCs. This issue is particularly evident for cooling applications in mild and warm climates, where CO_2 systems could operate in transcritical conditions for long periods of time. A decisive improvement of such systems can be accomplished performing subcooling of CO_2 exiting the gas cooler (Ge and Tassou, 2011).

In this work, a CO_2 transcritical/subcritical commercial refrigeration system was integrated with display cabinets and cold rooms of a supermarket. Subcooling of CO_2 is performed by means of a 950 m^3 cold sink consisting of a fire prevention water tank. The refrigeration system can be managed with a DSM program intervening either in the cycle or in the demand side. In the former case, it can be noted that the large fire prevention water tank acts as a cold thermal energy storage (CTES) whose recharging mode can be managed through a DSM strategy. On the demand side, instead, DSM can be accomplished by modifying the medium temperature (MT) and low temperature (LT) evaporators set-point temperatures.

The chosen DSM strategy is based on a DR program activated by a real-time pricing (RTP). As the proposed strategy was adopted for an existing system, electricity-price-based predictive rule based controls were considered (Fischer and Madani, 2017). Relevant advantages of predictive rule based controls include their inexpensiveness and no need of modifications of the setup under study. The analysis was conducted for the whole year 2018.

2. CASE STUDY

Figure 1 shows the schematic of the CO_2 plant under study. The considered refrigeration plant is installed in a supermarket and has a cooling capacity of 140 kW in the MT section and a capacity of 22 kW in the LT section. The supermarket includes 17 display cabinets and 10 cold rooms refrigerated through the MT section, and 4 frozen food display cases and 2 cold rooms refrigerated through the LT section.

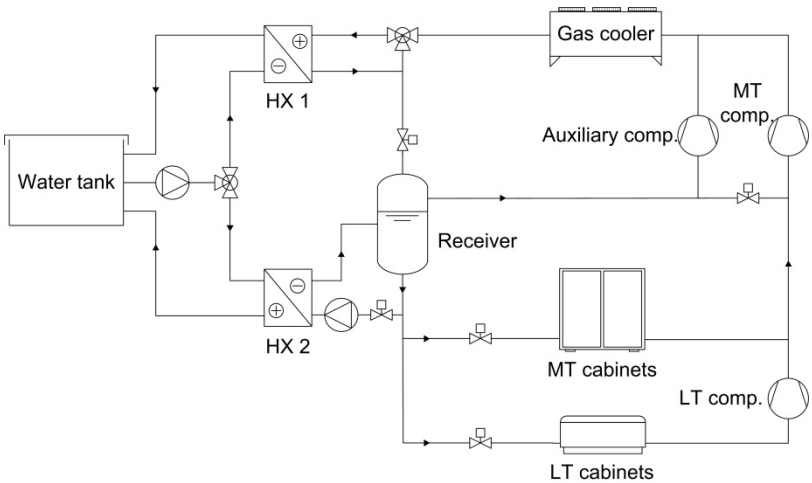

Figure 1: Schematic of the CO_2 refrigeration system

As can be seen in the scheme, the cycle includes a mid-pressure receiver where flash gas can be removed by the MT compressor rack or, if necessary, by an auxiliary compressor. The cycle operates both in subcritical and transcritical conditions depending on the external temperature. Two heat exchangers (HX1 and HX2) connect the refrigeration cycle to a 950 m^3 fire prevention water tank. HX1 allows the subcooling of the CO_2 exiting the gas cooler, while HX2 allows the recharge of the water tank by means of liquid CO_2. The most important design parameters of the refrigeration plant are reported in Table 1.

The supermarket is located in Genoa, Italy, a location characterized by mild climate conditions. The yearly profiles of the LT and MT cooling loads are depicted in Figure 2.

Table 1. Main design parameters

Parameter	Value
LT evaporating temperature [°C]	-35
MT evaporating temperature [°C]	-10
Superheating at evaporators [K]	5
ΔT approach of the gas cooler [K]	3
Liquid receiver temperature [°C]	3
ΔT approach of HX1 and HX2 [K]	3
Water tank volume [m^3]	950

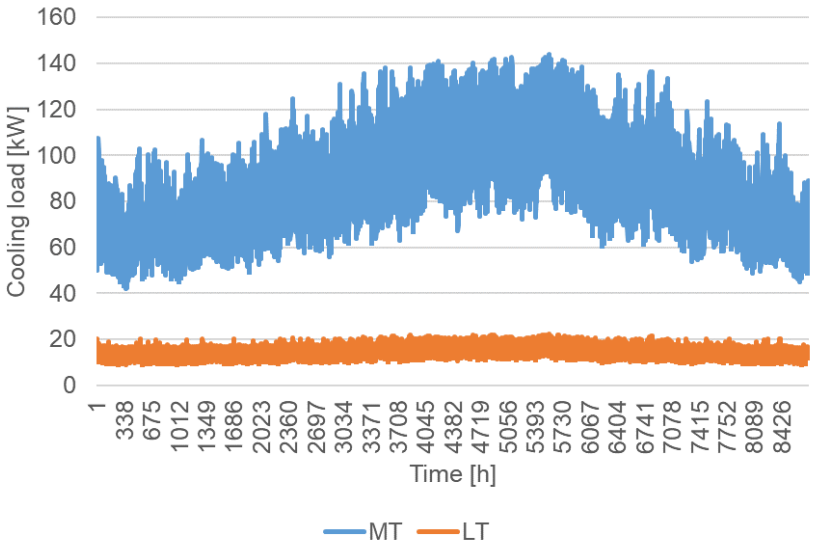

Figure 2: Yearly profiles of the MT and LT cooling loads

3. MODEL DESCRIPTION

The mathematical model of the entire refrigeration system, which includes the display cabinets, the cold rooms and the refrigerating unit was developed in TRNSYS (Klein et al., 2010). As concerns the refrigerating cycle, the thermodynamic and thermophysical properties of the refrigerant were calculated by linking our in-house routines to the CoolProp libraries (Bell et al., 2014). The expansion in all valves was considered isoenthalpic and the pressure drop in the suction lines was neglected. The isentropic efficiency of the compressor racks, as a function of the pressure ratio, was inferred by manufactured data. In subcritical operation the system runs in floating condensing mode; in transcritical and transitional operation the parallel compressor is activated and the high stage pressure is set according to the control rules described in Polzot et al. (2016).

The cooling load profiles from the refrigerated display cabinets (DC) and the cold rooms (CR) were determined according to the procedure reported in Polzot et al. (2016). Specifically, the cooling capacity of the display cabinets (q_{DC}) is equal to:

$$q_{\mathrm{DC}} = q_{\mathrm{sen}} + q_{\mathrm{lat}} + q_{\mathrm{aux}} \qquad \text{Eq. (1)}$$

where q_{sen} is the sensible load, q_{lat} is the latent load due to ambient air infiltration and q_{aux} is the sensible load from auxiliary devices (lighting, fans, defrost). The overall cooling capacity at rated conditions is adjusted taking into account the actual and time-dependent working conditions in the supermarket, such as the indoor air temperature and humidity or defrost schedule.

The fire prevention water tank is based on a TRNSYS type of stratified constant volume storage. It takes into account the heat transfer with the refrigeration system and the conductive losses to the ground, whose temperature was assumed to be dependent on the external temperature.

The heat exchangers HX1 and HX2 were modeled assuming appropriate approach temperatures (3 K). In HX2, the pressure in the liquid receiver was kept equal to 3.8 MPa (which corresponds to a saturation temperature of 3 °C) in order to avoid water freezing.

The climate conditions of the site were imported in TRNSYS through a Meteonorm typical meteorological year file (Remund et al., 2014) and the simulations were carried out using a time step of one hour.

4. DEMAND SIDE MANAGEMENT ANALYSIS

The DSM strategy applied to the refrigeration cycle under study aims to reduce the annual electricity cost by shifting the electricity demand from peak hours to off-peak hours. The strategy can be accomplished either by operating at cycle level, modifying the water tank recharging control strategy, or operating at demand level, by varying the evaporating set-point temperatures in the MT/LT sections. For these purposes, it is assumed that the supermarket could adhere to a RTP-based DR program.

Being the supermarket sited in Italy, the Italian PUN (Prezzo Unico Nazionale, National Single Price) referred to 2018 was considered as real-time price applied to the customer. The PUN has a resolution of one hour, is tax-free (it accounts for electrical energy generation only) and is based on a day-ahead market (the Italian Power Exchange).

4.1. Baseline configuration

The baseline configuration of the refrigeration system includes the subcooling of CO_2 operated by HX1 and the auxiliary compression used to remove the surplus of flash gas in the receiver. The recharge of the fire prevention water tank operated by HX2 was not included in the baseline configuration because, as determined in Polzot et al. (2016), this solution does not seem to be convenient under the point of view of energy use. As shown in the following section, however, we will try to apply a DSM strategy to the recharge control, in order to verify if there is at least the possibility of economic savings.

As regards the subcooling, the baseline configuration operates according to the following control strategy:

$$\text{if } t_{\text{tank}} < t_{\text{GC,out}} - \Delta t_{\text{ap}} \text{ and daytime} \rightarrow \text{subcooling active} \qquad \text{Eq. (2)}$$

Subcooling is therefore allowed only during daytime, when the water temperature t_{tank} is lower than the CO_2 temperature at the exit of the gas cooler $t_{\text{GC,out}}$ (with an appropriate temperature approach Δt_{ap}). The MT and LT evaporators have set-point temperatures equal to -10 °C and -35 °C, respectively. The yearly electricity consumption of the baseline configuration is 303.02 MWh.

Non-household consumers, such as the one considered, usually adopt time of use or fixed price tariff schemes. Taking into account the data provided by Eurostat for non-household consumers, in 2018 the average electricity price in Italy, with the exclusion of taxes and levies, was equal to 89.20 EUR/MWh (Eurostat, 2019). Thus, considering a fixed tariff based on this price, subtracted by a conservative -10% amount that accounts for the supplier's markup, the electricity price would be equal to 80.28 EUR/MWh. With this price, the overall electricity cost of the baseline configuration in 2018 is 24,326 EUR.

4.1. DR applied to the recharging of the fire prevention water tank

In the work by Polzot et al. (2016), it was seen that the recharging of the fire prevention water tank does not provide a yearly energy saving respect to a plant configuration with subcooling only. The non-convenience in the adoption of the recharging system was due to small outdoor temperature excursions. In the original plant setup, the control strategy regulating the recharging was:

$$\text{if } t_{\text{tank}} > t_{\text{tank,set}} \text{ and nighttime} \rightarrow \text{recharging active} \qquad \text{Eq. (3)}$$

Recharging, therefore, could occur when the water temperature t_{tank} was higher than the tank set-point temperature $t_{tank,set}$ (that was fixed to 17 °C) but only at nighttime when the cooling load from DC and CR was lower and the refrigerating capacity available with the highest COP thanks to the lower outdoor temperature.

In order to verify a possible economic convenience of the recharging solution, in the present work we tried to combine the original recharging control strategy with a DR program based on real-time pricing. The strategy described by Equation (3) was then integrated with the following one:

$$\text{if } PUN_i > \overline{PUN} \rightarrow \text{recharging not active} \qquad \text{Eq. (4)}$$

where PUN_i is the value of PUN in the ith hour of the year and $\overline{PUN}$ is the yearly mode of PUN in 2018, which is equal to 50 EUR/MWh. In this way, the recharging system is not allowed to operate when the PUN is too high.

4.2. DR applied to the MT/LT evaporators set-point temperatures

A DR program can be applied to the MT and LT evaporators set-point temperatures to shift the electricity demand from peak hours to off-peak hours. In a similar fashion of the DR program applied to the recharging system, the following strategy was applied to the MT evaporators set-point temperatures:

$$\text{if } PUN_i > \overline{PUN} \text{ and } q_{\mathrm{MT}} < 120 \text{ kW} \rightarrow t_{\mathrm{sp,MT}} = -8\ ^\circ\mathrm{C} \qquad \text{Eq. (5)}$$

$$\text{if } PUN_i < \overline{PUN} \text{ and } q_{\mathrm{MT}} < 120 \text{ kW} \rightarrow t_{\mathrm{sp,MT}} = -12\ ^\circ\mathrm{C} \qquad \text{Eq. (6)}$$

According to this strategy, the MT evaporators are allowed to increase their set-point temperature $t_{sp,MT}$ when the hourly PUN is higher than its yearly mode, and to decrease their set-point temperature when the hourly PUN in lower than its yearly mode. The condition referred to the MT cooling capacity q_{MT} was included to avoid variations of the MT evaporators set-point temperatures when the cooling load is too high. In this last case, the MT set-point temperature is kept equal to -10 °C, as defined in the baseline configuration.

As concerns the LT evaporators, a similar strategy was defined:

$$\text{if } PUN_i > \overline{PUN} \rightarrow t_{\mathrm{sp,LT}} = -30\ ^\circ\mathrm{C} \qquad \text{Eq. (7)}$$

$$\text{if } PUN_i < \overline{PUN} \rightarrow t_{\mathrm{sp,LT}} = -40\ ^\circ\mathrm{C} \qquad \text{Eq. (8)}$$

In this case, no condition was added to the cooling capacity q_{LT}, as the load profile defined for the LT section is much lower than that defined for the MT section (see Figure 2) and the frozen food is less sensible to temperature variations.

5. RESULTS OF THE ANALYSIS

In this section, the DR strategies applied at the refrigeration cycle level (recharging system) and at the demand level (MT and LT evaporators set-point temperatures) will be analyzed and discussed separately.

5.1. Results of the water tank recharging DR strategy

Figure 3 depicts how the yearly electricity demand and cost vary among the following setups: baseline (i.e., without recharging system) with a fixed tariff (FT), original configuration with the recharging system able to operate at nighttime (REC with fixed tariff), and DR configuration

including the recharging system able to operate in the same nighttime period (REC+DR with a PUN-based tariff).

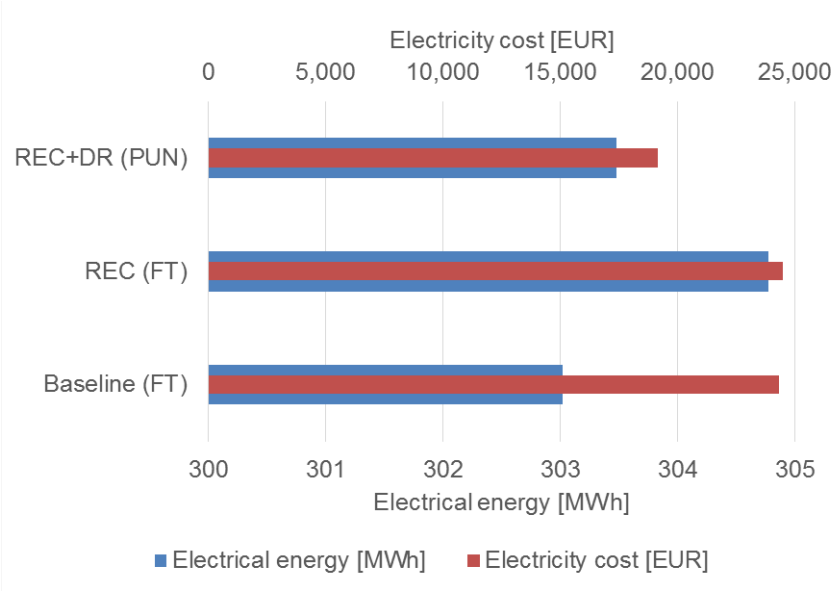

Figure 3: DR strategy applied to the water tank recharging (FT: fixed tariff)

As can be seen, there is an energy and cost convenience in adopting a DR strategy respect to the original configuration REC. However, the setup REC+DR is not able to perform better than the baseline configuration. In fact, even if the REC+DR configuration shows a lower yearly electricity cost respect to the baseline with a fixed tariff, this result depends only on the different tariff schemes adopted, and not on the DR strategy implemented. Considering a baseline with a variable tariff based on PUN, the REC+DR setup is not able to be more competitive than the first solution.

It can be therefore concluded that the plant setup including the recharge of the fire prevention water tank by heat exchange with liquid CO_2 does not provide any electricity energy/cost convenience, at least for the location under study.

5.2. Results of the MT/LT evaporators DR strategy

The DR strategies applied to the MT and the LT evaporators were studied separately at first. As shown in Figure 4, the DR strategy applied to the MT evaporators provides, respect to the baseline configuration, an energy saving of -2.15% and an electricity cost saving of -23.41%. Instead, when the DR strategy is applied to the LT evaporators, the electrical energy saved respect to the baseline is equal to -2.09%, while the electricity cost saving is -23.37%. When the MT and the LT strategies are applied together, the amount of energy saving is -4.25% and the electricity cost saving is -25.40%, corresponding to around 6178 EUR saved in a year respect to the baseline configuration.

It is worth noting that a variation in the evaporators set-point temperatures should be carried out carefully, as too wide intervals could influence the temperature of the stored food, leading to an undesired deterioration of the product. This is particularly true for the MT section, where chilled products should absolutely avoid freezing. For the considered case study, stabilization of the products' temperature could be guaranteed by providing the display cabinets and the cold rooms with appropriate cold thermal energy storages, e.g. phase change materials (PCMs). Properly sized PCMs, in fact, can be adopted for taking advantage of their high latent heat of fusion/solidification, allowing to keep the temperature of the stored products steady. PCMs based on eutectic water-salt solutions have melting temperatures lower than 0 °C and proved to be a good choice for use in refrigeration applications (Oro et al., 2012). In literature, many works depict the advantage of PCMs used in display cabinets and cold rooms, highlighting that the adoption of PCMs allows to maintain the same cooling power of the original cabinets and can lead to a

temperature reduction of core food, an improvement of temperature distribution uniformity and a reduction in temperature rise during defrost period (Lu et al., 2010; Sevault et al., 2018; Beek and Jong, 2014; Alzuwaid et al., 2015; Fioretti et al., 2016). In this way, it is possible to raise/decrease the evaporation temperature of few degrees for limited time while still maintain the required cooling conditions for the display cabinets and the cold rooms.

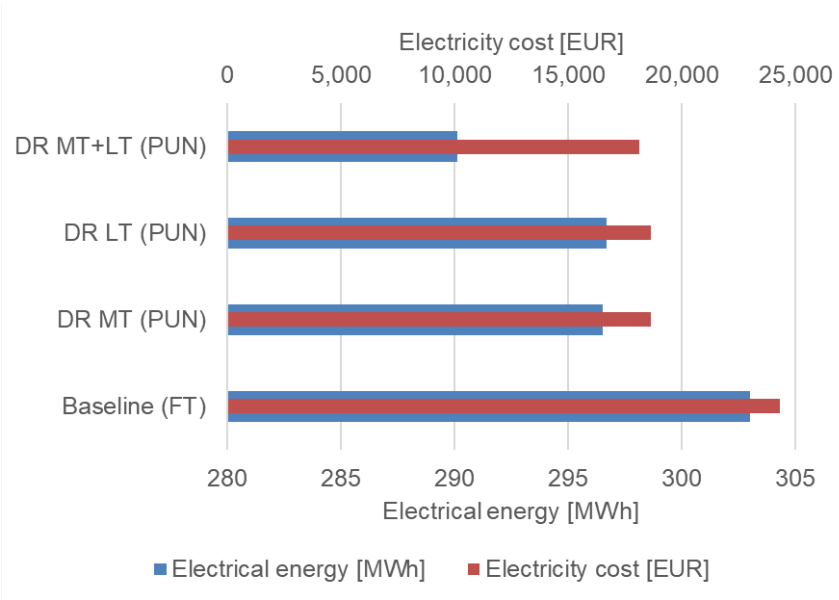

Figure 4: DR strategy applied to the MT/LT evaporators (FT: fixed tariff)

6. CONCLUSIONS

In this work, a demand side management (DSM) program based on a demand response (DR) strategy was applied to a CO_2 transcritical/subcritical commercial refrigeration system installed in a supermarket. The DR strategy was defined according to a real-time pricing (RTP) algorithm that takes into account the 2018 Italian National Price (PUN). The DR strategy was applied at both the refrigeration cycle level and the demand level. As regards the former, a DR algorithm was applied to the control strategy of the fire prevention water tank recharging system, which uses liquid CO_2 exiting the refrigeration system receiver. In this case, however, the simulation gave negative results: the DR-based configuration shows a yearly electricity cost lower than that of the original non-DR configuration, but the setup without recharging system still provides the lowest electricity cost. Two DR strategies were also applied at the demand level, specifically to the MT and LT evaporators set-point temperatures. It was found that the two strategies perform well, providing the best result when applied together. In this case, the yearly electrical energy saving is equal to -4.25% and the electricity cost saving corresponds to -25.40% respect to the non-DR baseline configuration.

ACKNOWLEDGEMENTS

This work was supported by the Italian Ministero dell'Istruzione, dell'Università e della Ricerca (MIUR) within the framework of PRIN2015 project "Clean Heating and Cooling Technologies for an Energy Efficient Smart Grid", Prot. 2015M8S2PA.

REFERENCES

Aazami, R., Aflaki, K., Haghifam, M. R., 2011. A demand response based solution for LMP management in power markets. Int. J. Elec. Power 33, 1125-1132.

Alzuwaid, F., Ge, Y. T., Tassou, S. A., Raeisi, A., Gowreesunker, L., 2015. The novel use of phase change materials in a refrigerated display cabinet: An experimental investigation. Appl. Therm. Eng. 75, 770-778.

Arteconi, A., Polonara, F., 2017. Demand side management in refrigeration applications. Int. J. Heat Tech. 35, S58–S63.

Beek, M. V., Jong, H. D., 2014. Reducing display bottle cooler energy consumption using PCM as active thermal storage. 15th International Refrigeration and Air Conditioning Conference, Purdue University, USA.

Bell, I. H., Wronski, J., Quoilin, S., Lemort, V., 2014. Pure and pseudo-pure fluid thermophysical property evaluation and the open-source thermophysical property library CoolProp. Ind. Eng. Chem. Res. 53, 2498-2508.

Cavallini, A., Zilio, C., 2007. Carbon dioxide as a natural refrigerant. Int. J. Low-Carbon Tech. 2(3), 225-249.

Eurostat, 2018. Electricity prices for non-household consumers. URL: https://ec.europa.eu/eurostat/web/energy/data/database

Fioretti, R., Principi, P., Copertaro, B., 2016. A refrigerated container envelope with a PCM (Phase Change Material) layer: Experimental and theoretical investigation in a representative town in Central Italy. Energ. Convers. Manage. 122, 131-141.

Fischer, D., Madani, H., 2017. On heat pumps in smart grids: A review. Renew. Sust. Energ. Rev. 70, 342-357.

Ge, Y. T., Tassou, S. A., 2011. Thermodynamic analysis of transcritical CO_2 booster refrigeration systems in supermarket. Energ. Convers. Manage. 52(4), 1868-1875.

International Institute of Refrigeration, 2015. The role of refrigeration industry in the global economy. 29th Inform, Note on Refrigeration Technology, Paris, France.

Klein, S., Beckman, W., Duffie, J. et al., 2010. TRNSYS 17: A Transient System Simulation Program. Mathematical reference. Solar Energy Laboratory, University of Wisconsin-Madison.

Lu, Y. L., Zhang, W. H., Yuan, P., Xue, M. D., Qu, Z. G., Tao, W. Q., 2010. Experimental study of heat transfer intensification by using a novel combined shelf in food refrigerated display cabinets (Experimental study of a novel cabinets). Appl. Therm. Eng. 30(2-3), 85-91.

Lund, P. D., Lindgren, J., Mikkola, J., Salpakari, J., 2015. Review of energy system flexibility measures to enable high levels of variable renewable electricity. Renew. Sust. Energ. Rev. 45, 785–807.

Oró, E., De Gracia, A., Castell, A., Farid, M. M., Cabeza, L. F., 2012. Review on phase change materials (PCMs) for cold thermal energy storage applications. Appl. Energ. 99, 513-533.

Polzot, A., D'Agaro, P., Gullo, P., Cortella, G., 2016. Modelling commercial refrigeration systems coupled with water storage to improve energy efficiency and perform heat recovery. Int. J. Refr. 69, 313-323.

Remund, J., Lang R., Kunz, S., 2014. Meteonorm. Meteotest, Bern (CH). URL: www.meteonorm.com

Sevault, A., Banasiak, K., Bakken, J., Hafner, A., 2018. A novel PCM accumulator for refrigerated display cabinet: design and CFD simulations. 12th IIR/IIF International Conference on Phase-Change Materials and Slurries for Refrigeration and Air Conditioning.